BODYCRAFT

SCT400g
Seated Elliptical Trainer

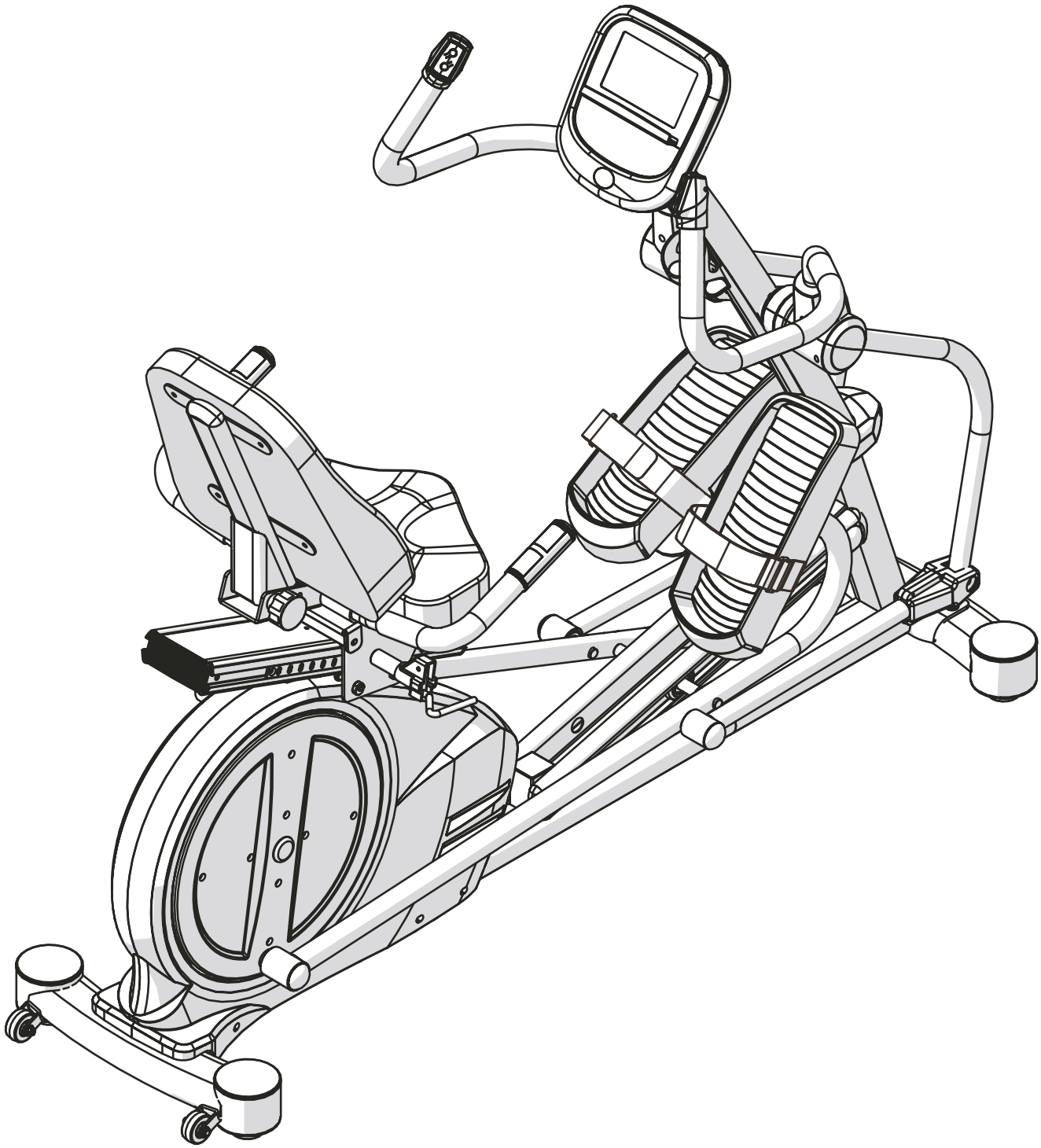

Owners Manual

www.bodycraft.com 800-990-5556 service@bodycraft.com

REV C

CONGRATULATIONS! And THANK YOU for selecting the BODYCRAFT SCT400g Seated Elliptical Trainer!
Your choice reflects a wise investment in you and your family's health and wellness. We hope you use it for many healthy years!

For your safety and benefit, please read this entire manual. Please keep the manual in a convenient place for quick reference when needed.

Bodycraft offers a complete array of high quality fitness equipment. Please refer to our web site at www.bodycraft.com to view more ways to enhance your lifestyle.

Your Bodycraft SCT400g has all the quality and design elements to make your workout extremely efficient and comfortable. Your new Seated Elliptical Trainer is a serious cardio fitness machine that will keep you motivated, challenged and within reach of your fitness goals. The Bodycraft SCT400g will provide an efficient, low impact cardiovascular workout that will help improve energy levels and your quality of life. Cardiovascular training is vital for all ages and the Bodycraft SCT400g will provide an effective workout, producing results that will encourage you to reach your fitness goals and maintain the body you have always wanted. Spending 15 to 30 minutes a day, three times a week is all you need to start seeing the benefits of a regular exercise program.

As a premium exercise equipment manufacturer we are committed to your complete satisfaction. If you have questions, suggestions or find missing or damaged parts, we guarantee your complete satisfaction through our authorized dealer network or by contacting us directly. Please call your local dealer or Bodycraft.

Phone: 800-990-5556 9 am - 5 pm EST **Email:** service@bodycraft.com
Recreation Supply, Inc.
7699 Green Meadows Dr.
Lewis Center, OH 43035

Purchaser's Reference Information:
IT IS IMPERATIVE THAT YOU FILL IN THE FOLLOWING INFORMATION AND REFER TO IT SHOULD THE NEED FOR SERVICE ARISE.

Product Name: SCT400g Elliptical Cross Trainer

Serial Number: SC _ _ _ _ _ _ _ _ _ _ _ _ _

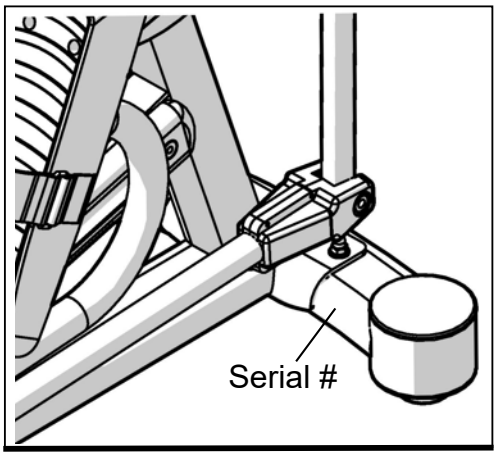

Proof of purchase must be supplied to validate warranty and the product must have been registered with Bodycraft via online at www.bodycraft.com or by calling 800-990-5556 or 740-965-2442 M-F 9 a.m. - 5 p.m. EST.

TABLE OF CONTENTS

Product Safety 1

Parts Drawing & Contents..... 2

Hardware & Tools 3

Assembly 4

Troubleshooting & Adjustment 9

Stretching 11

Computer Operation..... 12

Part List 18

Exploded View 20

Warranty 23

Product Safety

Basic precautions should always be followed, including the following safety instructions when using this equipment:

Read all instructions before using this equipment.

1. It is recommended that you perform warm up exercises before using this equipment.
2. Please make sure all components are not damaged and in working order before use.
3. This equipment should be placed on a flat surface while in use. Using a mat or other material on the ground is recommended.
4. Please wear proper clothes and shoes when using this equipment; do not wear clothes that might catch in any part of the equipment.
5. Do not attempt any maintenance or adjustments other than those described in this manual. Should any problems arise, discontinue use and consult an Authorized Service Representative.
6. Use caution when stepping on and off the machine. During the workout it is recommended that you always hold onto the stationary or upper body handle bars. To ensure the pedals run smoothly, you may need to push or pull on the upper body handlebars first, then follow with the leg motion.
7. Do not use the equipment outdoors.
8. This equipment is for household or light commercial use only.
9. Only one person should be on the equipment while in use.
10. Keep children and pets away from the product while in use. This machine is designed for adults only. If you feel any chest pains, nausea, dizziness, or shortness of breath, you should stop exercising immediately and consult your physician before continuing.
11. If you feel chest pains, nausea, dizziness, or shortness of breath, you should stop exercising immediately and consult your physician before continuing.
12. The maximum weight capacity for this product is **400** lbs /**180** kgs.

WARNING: Before beginning any exercise program consult your physician. This is especially important for the persons who are over 35 years of age or who have pre-existing health problems. Read all instructions before using any fitness equipment.

CAUTION: Read all instructions carefully before operating this product.

Retain this Owner's Manual for future reference.

A01 1Set	A04 1Set	A05 1Set	A06 1Set	A12/A13 1Set
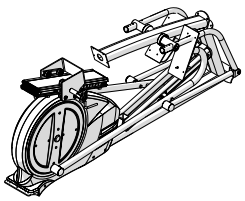	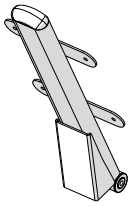	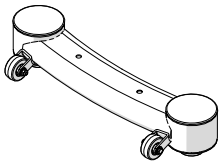	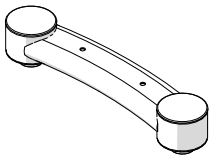	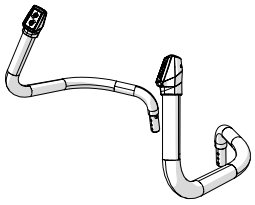
Main Frame	Backrest Tube	Rear Stabilizer	Front Stabilizer	Handrail L/R
A07 1Set	C10 1PC	D01 1PC	C07 2PC	C08 2PC
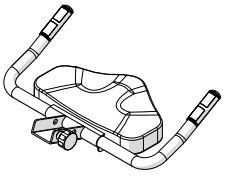	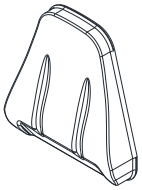		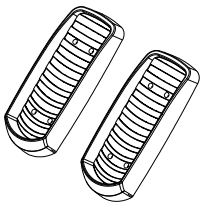	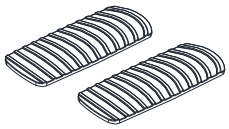
Saddle Frame	Upholstered, Backrest	Computer	Foot Pedal	Cushion Pad
C21/C22L.R 2Set	C38/C39 2Set	C14/C15 1Set	C35/C36 2Set	C23 1PC
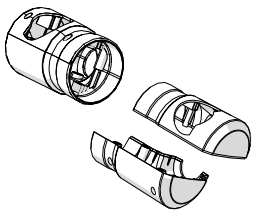	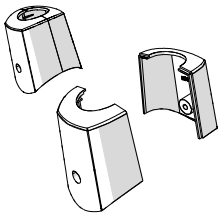	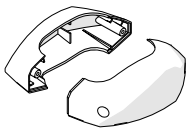	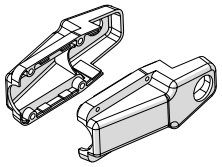	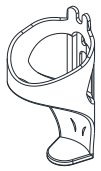
Lower Pivot Cover -A/B	Upper Pivot Cover -A/B	Upright Post Decorative Cover	Upright Joint Cover L/R	Water Bottle Holder

Hardware & Tools

B05 4PC 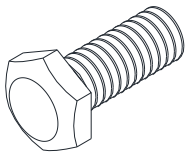 Hexagon Head Bolt M8x16mm	B06 4PC 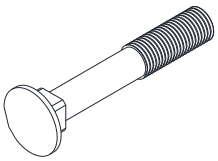 Bolt M8x50mm	B08 5PC 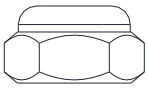 Nylon Nut M8	B07 4PC 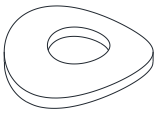 Curve Washer M8x20x1.5T	B29 10PC 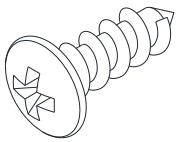 Screw M5x16mm
B26 8PC 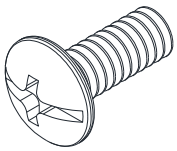 Screw M6*15 mm	B50 4PC 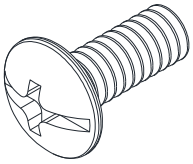 Screw 5/16”*15mm	B53 8PC 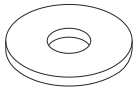 Washer 5/16”*16*1.5t	B52 4PC 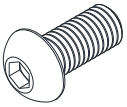 Screw M8*16 mm	B57 1PC 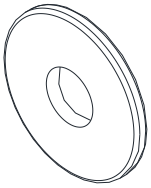 Washer 5/16”x30x2.0T
B61 1PC Bolt M8x100mm	B11 8PC 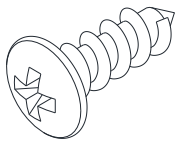 Screw 3/16*18mm	B09 6PC 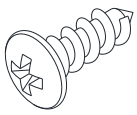 Screw M3*16mm		
1PC 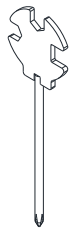 Hex Tool with Phillips Screwdriver (13/14/15mm)		1PC 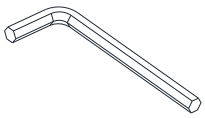 Allen Key (M5)	1PC 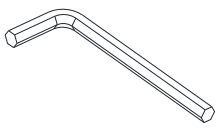 Allen Key (M6)	

1. PREPARATION

1.1 Open the top carton and remove the style foam block and the Upper Handrail Tube L/R (A12/A13) to the ground.

1.2 Move the Elliptical Cross Trainer away from the carton.

1.3 The assembly steps will required 2 persons.

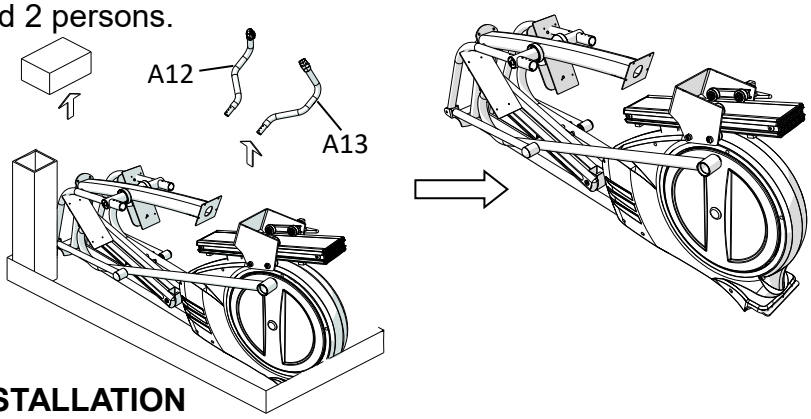

2. FRONT STABILIZER TUBE INSTALLATION

2.1 Use the Style Foam Block or a block of Wood to lift up the front of Main Frame (A01).

2.2 Remove Two 3/8” Screws (B24) and **Four** Washers 3/8” (B25) and **Two** 3/8" Dome Nuts (B21) from the Main Frame (A01).

2.3 Assemble the Front Stabilizer Tube (A06) under the bracket of Main Frame (A01) with **Two** 3/8” Bolts (B24), **Four** 3/8" Washers (B25) and **Two** 3/8" Dome Nuts (B21) which were removed from step .2.2

[Tighten bolts and nuts with the Hex Tool with Phillips Screw Driver provided.]

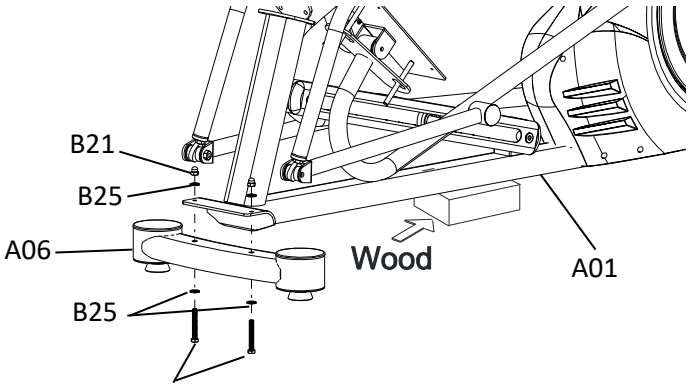

3. REAR STABILIZER TUBE INSTALLATION

3.1 Use the Style Foam Block or a block of Wood to lift up the rear of Main Frame (A01).

3.2 Remove **Two** 3/8” Screws (B24) and **Two** Washers 3/8” (B25) from the Main Frame (A01).

3.3 Assemble the Rear Stabilizer Tube (A05) at rear of Main Frame (A01) with **Two** 3/8” Bolts (B24), **Two** 3/8" Washers (B25) which were removed from step .3.2

[Tighten bolts and nuts with the Hex Tool with Phillips Screw Driver provided.]

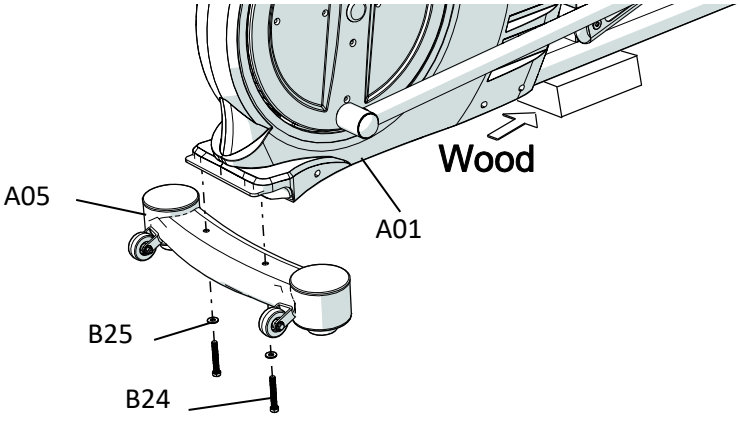

4. UPRIGHT POST INSTALLATION

4.1 Lift up the Upright Post (A02) and connect the Cable I (D17 and D07) from Upright Post to the Cable II (D18 and D08) from Main Frame (A01). then slide the extra length of cables into opening hole of Main Frame (A01)

4.2 Slide the wires into the opening hole of Main Frame (A01) carefully and use **Four** M8 Screws (B05) by fingers first for aligning the punched holes and threaded holes.

[Tighten screws with the Hex Tool with Phillips Screw Driver provided.]

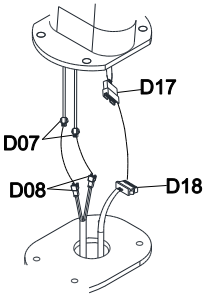

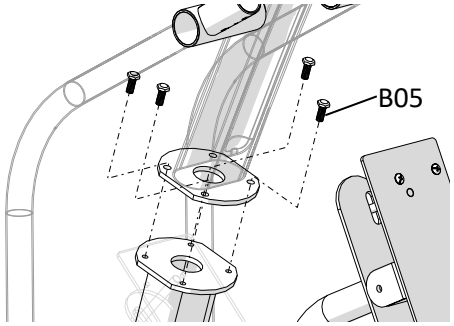

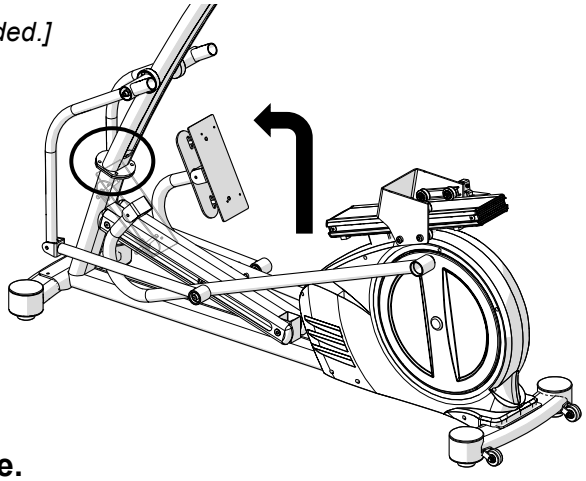

Attention: Cables can't be folded.

Please do not tighten one of the four bolts at once.

Please tighten all four bolts simutaneously by turning the treads of each bolt one by one.

5. ADJUSTING THE ADJUSTABLE FOOT PADS

5.1 Adjust the Adjustable Foot Pads (C05) on the Main Frame (A01) as needed to level the Seated elliptical trainer

5.2 The Seated elliptical trainer has to be leveled to prevent from wobble or shaking during the exercise.

[Tighten screws with the Hex Tool with Phillips Screw Driver provided.]

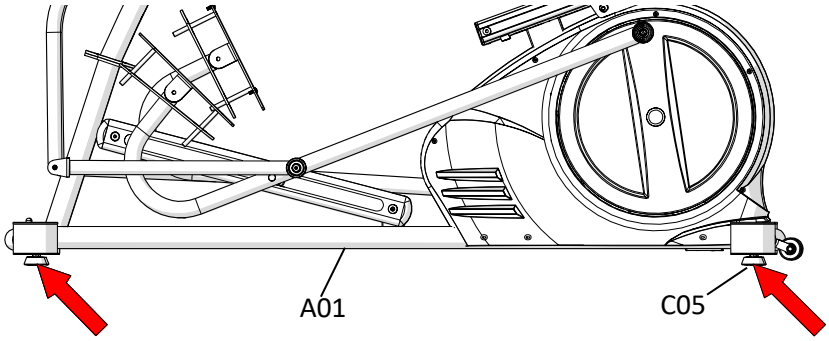

6. UPRIGHT JOINT COVER INSTALLATION

6.1 Assemble the Left and Right Upright Joint Covers (C15/C14) onto the brackets of Upright Post (A02) and the Main Frame (A01) with 2 Screws M5 (B29).

[Tighten screws with the Hex Tool with Phillips Screwdriver provided.]

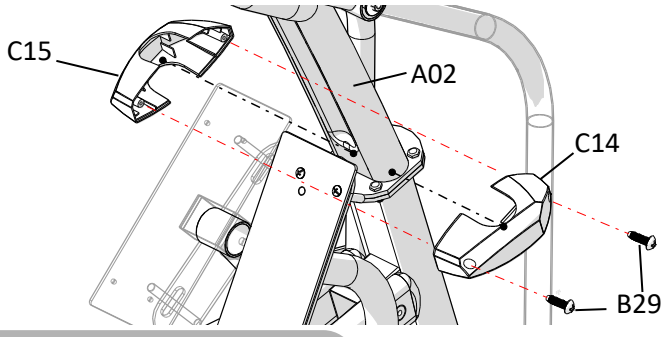

7. FOOT PEDAL INSTALLATION

7.1 Assemble Right Foot Pedal [C07] on Foot Pedal Tube [A17] with 4 Screws M6 [B26].

7.2 Peel off the plastic cover of the foam tape under the Cushion Pad [C08] and attach the Cushion Pad [C08] on Foot Pedal [C07].

7.3 Repeat the same step to assemble the Left Foot Pedal [C07]

[Tighten screws with the Hex Tool with Phillips Screwdriver provided.]

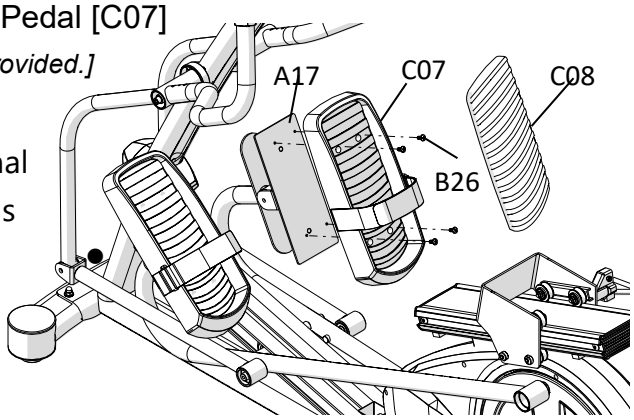

Note: Foot straps appear on the illustration are optional accessories. Contact BODYCRAFT for purchasing details

8. PIVOT CAPS INSTALLATION

8.1 Assemble the Left/Right Pivot Caps -A/B (C35/C36) onto the Right Handrail Arm (A15) with **Four** M5 Screws (B11).

8.2 Repeat the same step to assemble the Pivot Caps of Right Lower Handlebar (A14).

[Tighten screws with the Hex Tool with Phillips Screwdriver provided.]

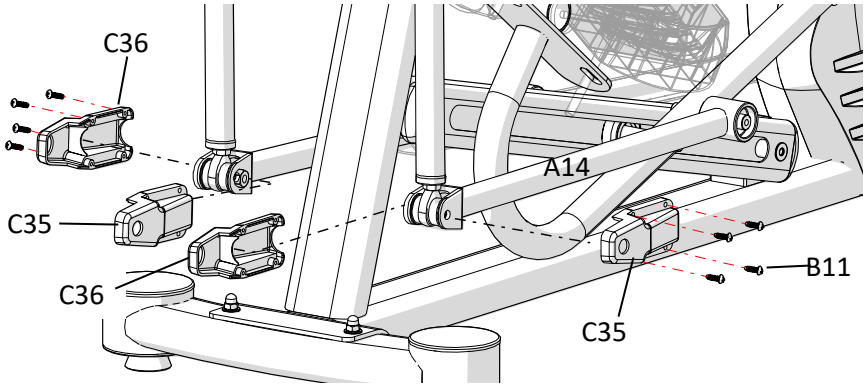

9. UPPER HANDRAIL TUBE INSTALLATION

9.1 Assemble the Upper Handrail Tube (A12/A13) into the Handrail Arm (A08/A09) with **Two** M8 Bolts (B06), **Two** M8 Curve Washers (B07) and **Two** M8 Nylon Nuts (B08).

9.2 R Refer above step to assemble left side part.

9.3 Connect all connectors (D05/D06) from L/R Upper Handrail (A12/A13) to the matching connectors (D10/D11) from Handrail Arm (A08/A09)

[Tighten screws with the Hex Tool with Phillips Screwdriver provided.]

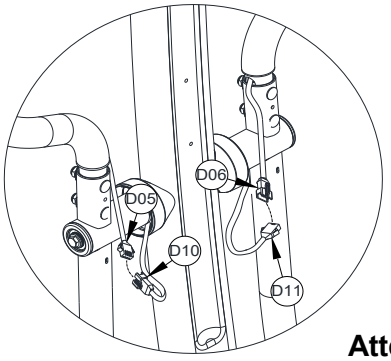

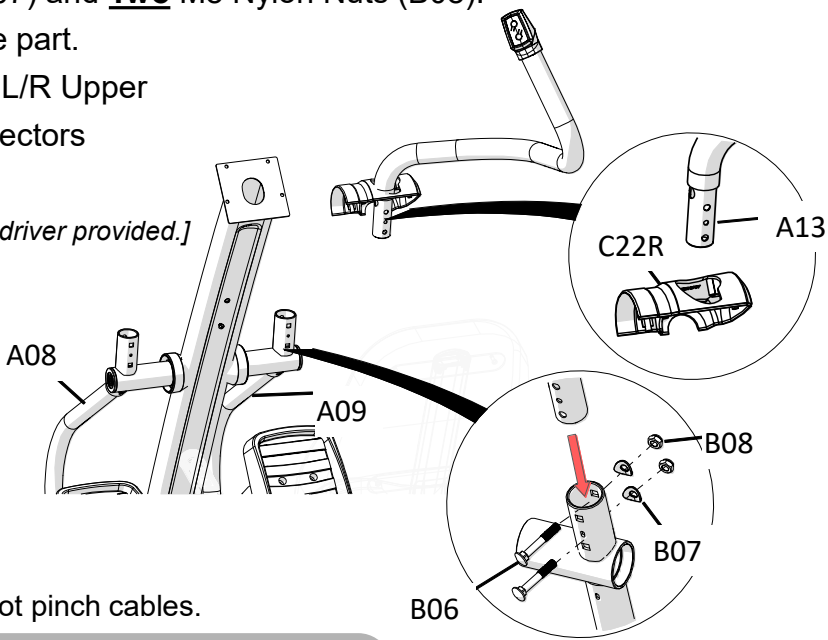

Attention: Do not pinch cables.

10. PIVOT COVER INSTALLATION

10.1 Assemble the Pivot Covers -A/B (C21/C22R) to the pivot of Right Lower Handlebar (A09) with **Three** M3 Screws (B09). Repeat the same procedure to the Left.

10.2 Assemble the Pivot Covers -A/B (C38/C39) to the pivot of Right Lower Handlebar (A09) with **Four** M5 Screws (B29). Repeat the same procedure to the Left.

10.3 Repeat the same step to assemble the pivot covers of the left side.

[Tighten screws with the Hex Tool with Phillips Screwdriver provided.]

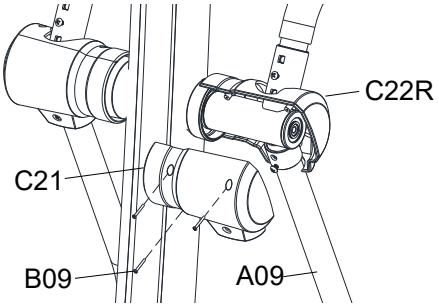

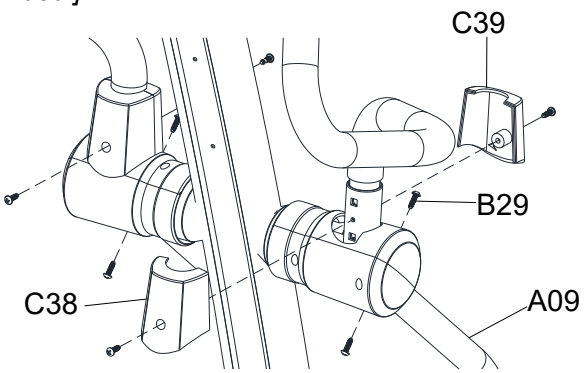

Attention: Do not pinch cables.

11. WATER BOTTLE HOLDER INSTALLATION

11.1 Remove **Two** M5 Screws (B31) from the Upright Post (A02).

11.2 Assemble the Water Bottle Holder (C23) onto the Upright Post (A02) with **Two** M5 Screws (B31)
which were removed from step 11.1.

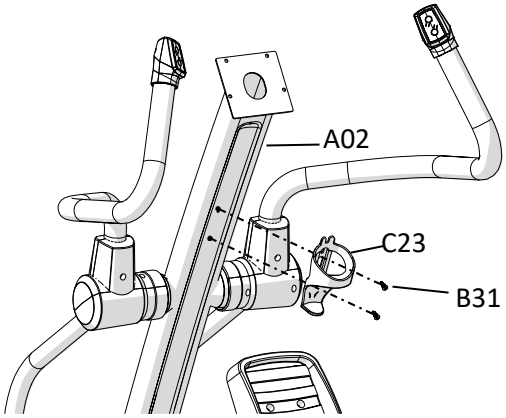

COMPUTER INSTALLATION

11.3 Remove **Four** M5 Screws (B16) from the bottom of Computer (D01).

11.4 Connect the Hand Pulse Cable (D07) and L/R Quick Key Cables (D10/D11) to all cables that come from the Computer (D01).

11.5 Assemble the Computer (D01) onto the plate of Stationary Handlebar (A02) with **Four** M5 Screws (B16) which were removed from step 12.1.

[Remove/Tighten screws with the Hex Tool with Phillips Screwdriver provided.]

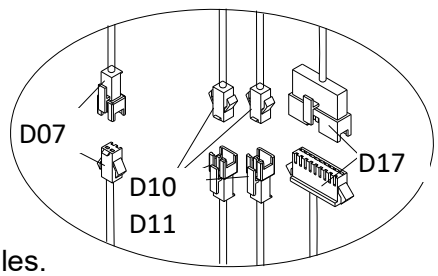

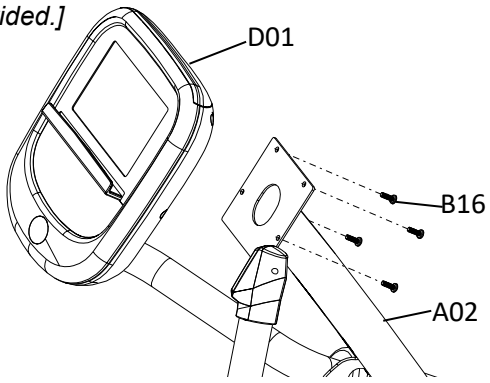

Attention: Do not pinch cables.

13. UPHOLSTERED BACKREST INSTALLATION

13.1 Assemble the Backrest (C10) to the Backrest Tube (A04) and align the four screw holes to the holes at the bracket of the Backrest Tube. Use **Four** 5/16" Washers (B53) and **Four** 5/16" Bolts (B50) and tighten the bolts on the Backrest Tube.

[Tighten screws with the Hex Tool with Phillips Screwdriver provided.]

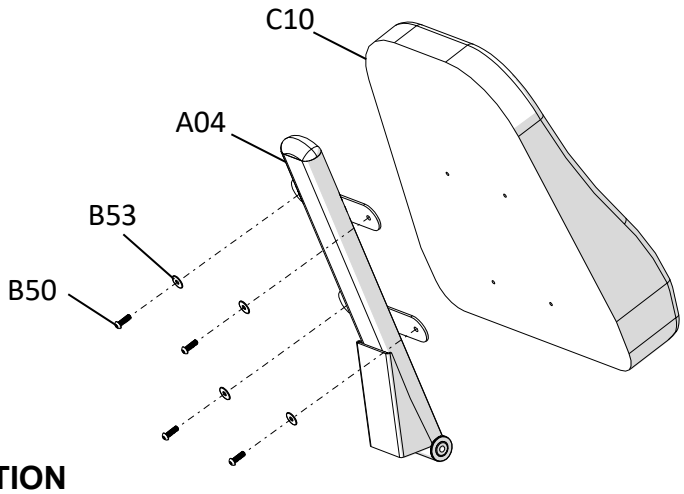

14. SADDLE FRAME INSTALLATION

14.1 Connect the Hand Pulse Cable (D09) and Cables (D08) to all cables that come from the Saddle Frame (A07).

14.2 Assemble the Saddle Frame (A07) to the Moveable Seat Bracket (A03) and align the four screw holes to the holes at the bracket of the Moveable Seat Bracket [A03]. Use **Four** M8 Bolts (B52) and **Four** Washers (B53)

14.3Assemble the Backrest Tube (A04) to the Saddle Frame (A07) and align the four screw holes to the holes at the bracket of the Saddle Frame (A07). Use **One** M8 Bolts (B61) **One** M8 Washers (B57) and **One** M8 Nylon Nuts (B08)

[Tighten screws with the M6 Allen Key provided.]

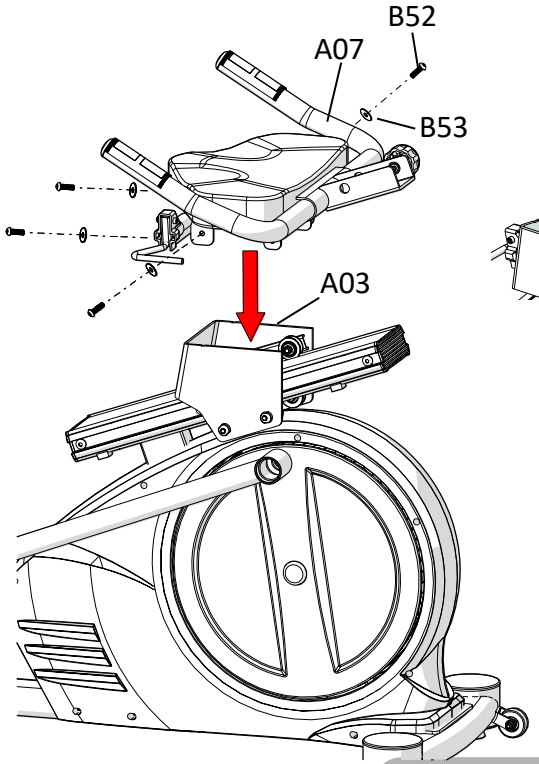

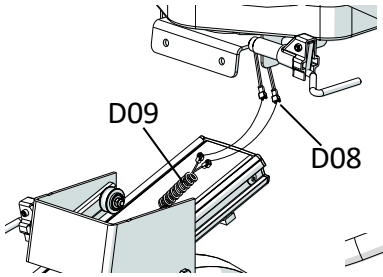

Attention: Do not pinch cables.

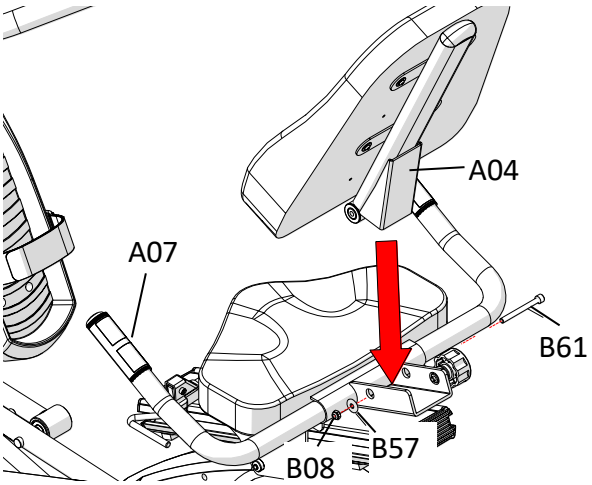

Computer not working correctly

Check all connections to the computer at the top and base of the Mast. It is a good idea to unplug and reconnect the connectors during your inspection to ensure all of the computer cables are connected securely.

The Seated elliptical trainer wobbles when in use

If you have recently relocated your machine or if the jam nuts on the levelers have worked loose, you may need to re-adjust the levelers. Follow the procedure for leveling the machine in this manual.

Squeaking noise when in use

Inspect all frame bolts that may have worked loose on the Seated elliptical trainer. Re-tighten any loose bolts.

No, inconsistent, or erratic heart rate reading

Your Seated Elliptical Trainer is equipped with dual contact handgrip pulse and a wireless 5 kHz heart rate receiver. You should first try to to determine which is causing the problem. If you are seeing a reading without holding onto the contact sensors, it is likely the wireless receiver that is the problem.

Wireless:

Unusually high, low or random numbers in the heart rate display indicate a problem.

Try moistening the electrodes on the heart rate belt.

The batteries in the belt may be failing. Replace the batteries or the Heart Rate belt.

The problem may be caused by interference. Televisions, microwaves, wireless alarms and electric fences are just a few items that can cause interference. You can try relocating the machine to a different part of the room. If you continue to have problems, please contact Bodycraft for additional troubleshooting of wireless heart rate issues.

Contact Heart Rate:

Always hold on to the handlebar grip sensors with two hands instead of just one.

Try to maintain moderate pressure while holding onto the hand pulse sensors.

Make sure that the wire connections for the hand pulse sensors are secure.

Compare the stationary grip pulse to the grip pulse on the dual action arms. If you get a accurate readout out with the stationary grips, the problem is that your hands are losing grip during the workout.

Attention:

When the Seat Bracket (A03) wobbled, use a wrench to adjust the gap between the Plastic Pulley (C16) and the Aluminum Rail (F01 & F02). Turn the Pulley Shaft (B48) with a wrench counter-clockwise with smaller gap.

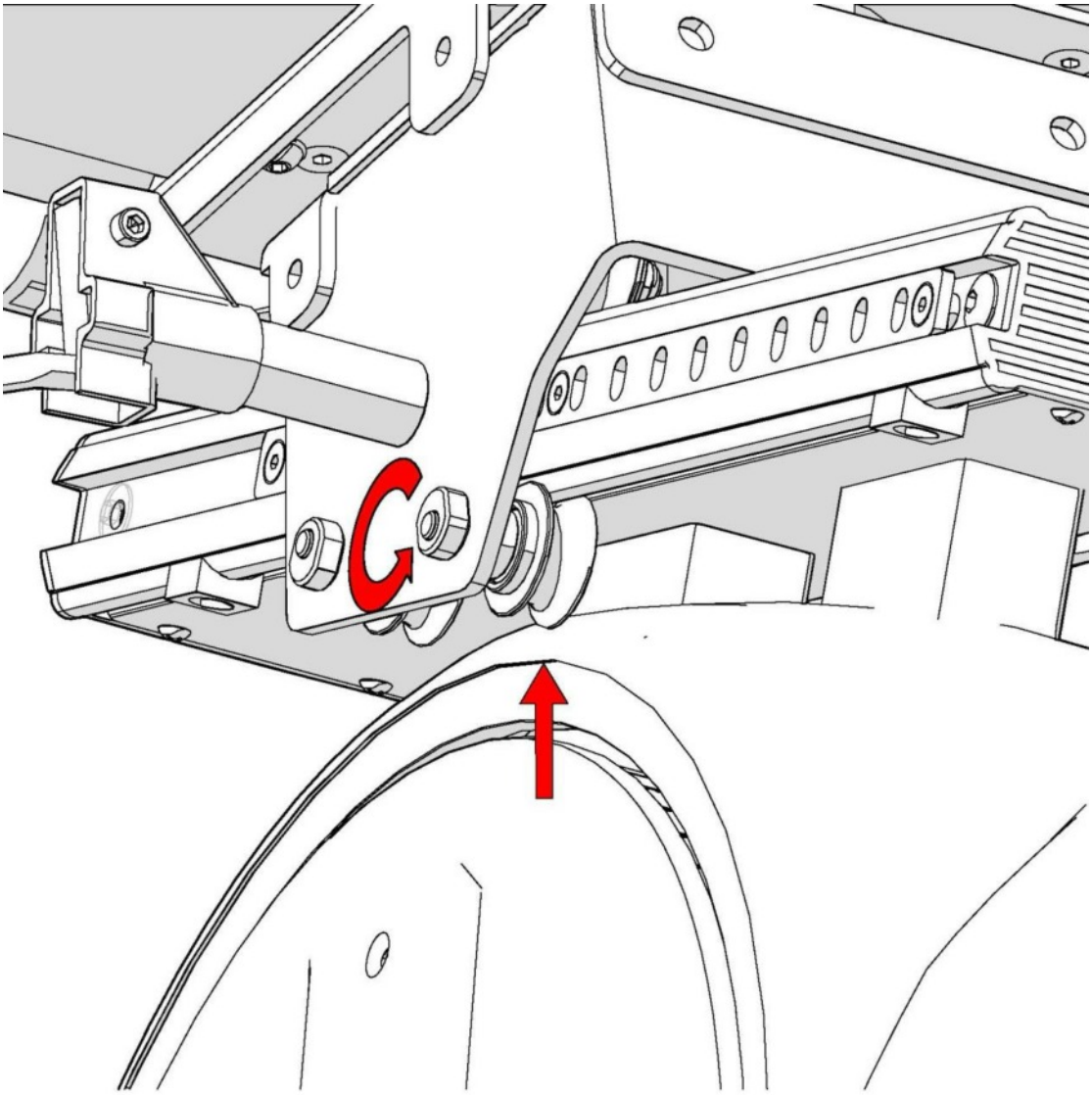

Quadriceps Stretch

With one hand against a wall for balance, reach behind you and pull your left foot up. Bring your heel as close to your buttocks as possible. Hold for 15 counts and repeat with right foot up.

Inner Thigh Stretch

Sit with the soles of your feet together with your knees pointing outward. Pull your feet as close into your groin as possible. Gently push your knees towards the floor. Hold for 10 counts.

Toe Touches

Slowly bend forward from your waist, letting you back and shoulders relax as you stretch toward your toes. Reach down as far as you can and hold for 15 counts.

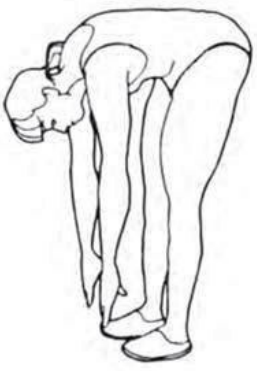

Hamstring Stretches

Sit with your right leg extended. Rest the sole of your left foot against your right inner thigh. Stretch toward your toe as far as possible. Hold for 15 counts Relax and then repeat with left leg extend

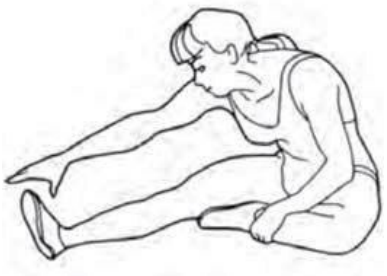

Console Operation Instruction

Please thoroughly read the console operation instructions before use. It is important that you get familiar with the computer console and understand the functions. Below is the console layout and detailed operation instructions.

Layout:

--- *The USB port is for software updates only, please do not use for charging or other software usages. ---

Displays

- Dot matrix profile window:
  Displays program profile during program setting and execution. The program profile will be different according to which program is selected. *Except HR programs, all other program profiles will follow display rules below.*

  There are 20 columns of Dots representing 20 segments of time; each segment time = total program time divided by 20 columns, except Quick Start program which represents 1 minute per column. During exercising, a column of Dots will blink to indicate the time segment you are currently in and show your workout progress.

  There are also 10 rows of Dots representing 20 levels of resistance. Each row represents 2 levels of resistance. The appropriate row of Dots will light up when you adjust the resistance level.

- Data display windows:
  There are 8 datadisplay windows displaying "speed, time, distance, calories, rpm, level watts, and pulse" during exercising.

- Alphanumeric display window:
  This display will prompt instruction messages to assist you setting up the program and during exercising.

Keys

- Go key: Pressing this key during idle mode before you select a program will activate the Quick Start program immediately with default user values. Or pressing this key during the program setup after a program is selected will start the selected program.

- ▲/▼keys: Used for toggle between different programs during idle mode, user data adjusting during program setup and resistance level/ heart rate adjustment while a program is running.

- Enter key: Used to confirm program and data entry.

- Home key: Used to exit the current activities and go back home/idle mode.

- Save key: Pressing this key while a program is running to save current program profile as well as user personal data into the custom program for later use with the exception of heart rate control programs. Heart rate control program can't be saved as a custom program. After saving message, it will return to previous activities.

Basic Operation

- Power up: If this is a self-generating product, user must pedal the product to power up the console.

- Pause a program: If a program is running and there is no RPM for 10 seconds, the console will pause and stop accumulating data. The pause time is 3 minutes. After that, the console will reset back to idle mode. Within pause mode, pedal again to resume the program.

- Power save function: This console is equipped with power save function. If there is no RPM, the console screen will be off and enter power save mode.

- Start a program: To begin a workout program during idle mode, press the "Go" key to quick start the program or "▲/▼" key to toggle through different programs and "Enter" key to select a program. Then follow the instruction on the alphanumeric window to set up the personal data. When finished entering data, press the "Go" key to begin the workout. (You may press "Go" key anytime during setup to bypass and start the workout immediately.)

- Default values: Initially the console is coded with a set of defaults for express quick start. If you didn't adjust these values before the program started, they will be used for data calculations, such as calories. It is recommended you adjust these values with your own personal data to get the most accurate workout feedbacks. The factory defaults are:

- Age – 35
- Weight – 150lbs or 70kg
- Program time – 30 minutes
- Target HR & Work HR – 70% max HR *(Max HR is calculated as 220-age)*

- End a program and review summary: When program time is reached, it will end the program and enter summary review mode. There are 30 seconds for you to review and record the workout summary before it resets and back home.

- Units switching: The default units setting is English. To switch this to Metric system, first, press and hold both "▲&▼" keys at the same time in idle mode for 2 seconds to go to "engineering mode"; second, when message window shows "UNITS: ENGLISH", press "▲&▼" key to switch. Afterwards press Enter key to confirm. Anytime in "engineering mode", you may press "Home" key to return home.

Workout Programs

In addition to the Quick Start function, there are 8 program options for your selection: Manual, Random, Interval, Hill Climb, Strength, Target HR, HR Interval and Custom.

Quick Start: Pressing "GO" key during idle mode will quick start the console. The program will use factory defaults for calculation and display. The time will count up and each segment of progress profile equals 1 minute. You may stop pedaling at any time or press "Home" key to end the program.

Classic Programs: This group includes Manual, Random, Intervals, Hill Climb & Strength program.
These programs are preset profile programs and behave similar. When the desired program appears on the screen, press Enter key to confirm. Then follow the instruction to set up the user data and start the program. You may adjust the resistance level by pressing "▲/▼" key during program. The dot matrix profile will update accordingly.

- Manual program: The default resistance level for Manual program is L1.
- Random program: This is a computer generated profile program and it is different each time.
- Intervals program profile:

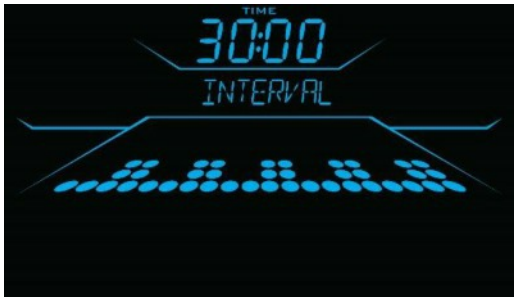

- Hill Climb program profile:

- Strength program profile:

HR programs: The Heart Rate programs are designed to keep you training at the chosen heart rate level. **These programs will only work when there is a valid heart rate signal**. For your safety, the program will start with a warm up session to get the heart rate up within 20% of the target before it begins the heart rate training session.

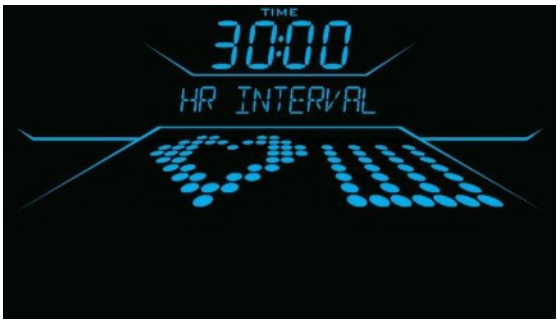

During warm up, user may press "▲/▼" key to adjust the resistance and get the heart rate up. As soon as the heart rate training session begins, the console will take control and adjust the resistance level automatically to ensure your target heart rate is achieved and maintained during the entire program.

- Target HR program: Default heart rate target is set at 70% max HR (*calculated as 220-Age*). You may also press"▲/▼"key to adjust the target heart rate setting during heart rate control session of the exercise.

- HR Interval program profile: There are two phases of this training: Work Interval and Rest Interval. After warm up, the console will take the default target setting to begin Work interval and adjust the resistance automatically. When the target setting is reached the Work Interval lasts for 30 seconds, it will then enter Rest interval and reduce the resistance down to level 2 for 2 segments of time for resting. It will repeat this process throughout the entire program.

- During exercise, the profile on the Dot Matrix display will show your selected target heart rate setting and your progress so far. The pulse data display window will show the actual heart rate. *Example: HR interval program exercising screen*

Custom program: This program is a space for you to build your own workout profile and store it for future use. If you have previously saved a custom program, you may recall it and press “Go" key to begin immediately without the hassle of entering user information again because it has been stored along with the program profile you created. However if you desire, you may still go through the program setting and change it as well. Follow the message prompts to operate this program the same way as the original program.

Heart Rate Monitoring Devices & Exercise Tips

Pulse Hand Grips

This product comes standard with stainless steel pulse handgrips. To activate, gently grasp both handgrips to obtain a heart rate reading. (Note: It is recommended to wear a chest strap for Heart Rate control program, as it is more accurate. If you wear a chest strap and use hand grips at the same time for heart rate monitoring purpose, please note the console will take the measurement of the chest strap.)

Pulse Grip Operating Tips: If you are not getting a consistent reading while using the hand pulse option, we recommend the following suggestions:

- Make sure that the palms of the hands are touching the contact area of each hand pulse grip.
- Maintain an even pressure on the grips.
- Do not hold the hand pulse grips too tightly.

Built in Wireless Heart Rate Receiver

Note: Chest strap transmitter does not come with this unit; contact BODYCRAFT, or your dealer for purchase.
This product is equipped with a built-in receiver for your heart rate monitoring. Any heart rate telemetry strap that transmits at 5 kHz is compatible. To get an accurate reading using these devices, you will need to be within three feet of the console, and a minimum of four feet from others using a heart rate monitoring device.
(Note: The transmitter may fluctuate erratically if you are too close to other heart rate monitoring equipment or there is other electronics near by, such as TV, Radio...)

While using heart rate control modes, the computer monitors the exact measurement of your pulse. IT is highly recommended that you use a Heart Rate Belt for these programs. Your heart rate is displayed while the computer continually compares heart rate to the preprogrammed personal data. The computer adjusts the resistance to maintain heart rate at the preprogrammed level.

How to Wear Your Sensor/ Transmitter (Chest Strap)

1. Buckle one end of the chest strap onto the transmitter.

2. Adjust the band length so that the fit is snug, but not too tight.
3. Buckle the other end of the chest strap onto the transmitter.
4. Center the transmitter on your chest below the pectoral muscle (breasts).
5. Stretch the transmitter away from your chest and moisten the conductive electrode strips located next to the buckles with water.

(Note: The transmitter is on automatically when being worn. It is off when it is not connected to your body. However, as moisture may activate the transmitter, thoroughly dry the transmitter to prolong battery life.)

Erratic Heart Rate Readings:
Erratic readings on the receiver can be caused by electromagnetic disturbances. If the heart rate readings appear to be abnormal, check that your product is not within range of other strong electromagnetic signals. Common sources are televisions, computers, cars, cell phones, TV antennas and high voltage power lines (both above and below ground). Please note: Static electricity in clothing or a flapping shirt can cause electrical interference, so some items of clothing, i.e. man-made fibers, can also be the cause. Please try wetting the t-shirt in the area where the transmitter is.
(In rare cases some people may be need to purchase Electrode gel. This is available online or at a local medical supply. We recommend the brand Signa Gel brand).

If the battery of the transmitter is running low, the transmission range decreases and may cause errors similar to the ones listed above in this document.

Heart rate is an important key to your exercise
Medical research has shown us that there is an amount of exercise, which is enough to condition the cardio respiratory system and the muscles of the body. This amount of exercise is between 60% and 85% of your maximum heart rate measured during a training session. This range allows enough exercise to achieve fitness, but not an excessive amount to cause injury. Your heart rate is an excellent indicator of the amount of stress placed on the cardiovascular system.

If exercise intensity is too low or too high, no gains will be made in fitness. If the intensity is too low, the stress levels are ineffective. If the intensity is too high, injury or fatigue may set your exercise program back as you try to recover. Your target heart rate, the intensity needed to improve cardiovascular fitness, depends primarily on your age and not your state of fitness. It is calculated as a percentage of your maximum heart rate, estimated as 220 minus your age. It is most effective to train at your target heart rate between 60% and 85% of your maximum heart rate.

Get a smart start on exercising.
Anyone over the age of 35, as well as younger persons whom are overweight, should check with his/her physician before beginning any type of exercise program. People who have diabetes or high blood pressure, a family history of heart disease, high cholesterol or have lead a sedentary lifestyle should protect themselves with a medical check-up and a stress test, preferably administered during exercise by a healthcare professional.

- Always stretch before your workout to loosen muscles, and afterwards to cool down.
- The first few minutes of your workout should be devoted to warming up muscles before a vigorous workout, and building your heart rate slowly.
- After your aerobic workout of about 24-32 minutes, spend 10 minutes gradually reducing your heart rate with a lower resistance level.

Remember, to start slow, with intensity low, until you build endurance and strength. And always consult your physician before beginning any exercise program.

Part List

Part No.	Description	Qty		Part No.	Description	Qty
SC40-A01	MainFrame	1		SC40-B18	M3 Screw	4
SC40-A02	UprightPost	1		SC40-B19	Spacer	1
SC40-A03	Moveable Seat Bracket	1		SC40-B20	M20 Nut	1
SC40-A04	Backrest Tube	1		SC40-B21	Cap Nut 3/8"	2
SC40-A05	Rear Stabilizer	1		SC40-B22	Bolt M8x16mm	6
SC40-A06	Front Stabilizer	1		SC40-B23	Shaft Ø20	2
SC40-A07	Saddle Assembly	1		SC40-B24	3/8" Bolt	4
SC40-A08	Dual Action Arm /L	1		SC40-B25	3/8" Washer	6
SC40-A09	Dual Action Arm /R	1		SC40-B26	Bolt M6x15mm	8
SC40-A10	Foot Pedal Tube /Left	1		SC40-B27	Hex Head Bolt M8x16mm	10
SC40-A11	Foot Pedal Tube /Right	1		SC40-B28	M5 Self Tap Screw	2
SC40-A12	Dual Action Handlebar Tube /L	1		SC40-B29	M5 Screw	29
SC40-A13	Dual Action Handlebar Tube /R	1		SC40-B30	5/16" Washer	8
SC40-A14	Picot Link/L	1		SC40-B31	M5 Screw	2
SC40-A15	Picot Link/R	1		SC40-B32	M8 Rivet Nut	5
SC40-A16	Pedal Adjustment Frame/L	1		SC40-B33	M6 Rivet Nut	3
SC40-A17	Pedal Adjustment Frame/R	1		SC40-B34	Lock Pin Plate	1
SC40-A18	Guide Rail Tube	2		SC40-B35	M6 Screw	3
SC40-A19	Seat Bracket	1		SC40-B36	Lock Pin Spacer	3
SC40-A20	Cross Main Frame /L	1		SC40-B37	M8 Bolt	5
SC40-A21	Cross Main Frame /R	1		SC40-B38	Spacer	5
SC40-B01	1/4" Bolt	2		SC40-B39	M4 Screw	4
SC40-B02	1/4" Washer	4		SC40-B40	M6 Nylon Nut	2
SC40-B03	1/4" Nylon Nut	2		SC40-B41	M5 Bolt	2
SC40-B04	Thrust Bearing	1		SC40-B42Y	Seat Position Locking Handle	1
SC40-B05	M8 Bolt	4		SC40-B42R	Seat Swivel Locking Handle	1
SC40-B06	M8 Carriage Bolt	4		SC40-B43	M5 Nylon Nut	2
SC40-B07	M8 Curve Washer	4		SC40-B44	Spring	2
SC40-B08	M8 Nylon Nut	4		SC40-B45	Lock Pin	2
SC40-B09	M3 Screw	6		SC40-B46	M8 Nylon Nut	4
SC40-B10	Thrust Bearing	1		SC40-B47	M8 Bolt	4
SC40-B11	3/16" Screw	24		SC40-B48	Pulley Shaft	4
SC40-B12	Washer 5/16"	4		SC40-B49	M6 Bolt	2
SC40-B13	C-ring R-34	2		SC40-B50	Screw 5/16”	8
SC40-B14	Spring	4		SC40-B51	Bolt M5	4
SC40-B15	Pulley Spacer	4		SC40-B52	M8 Bolt	8
SC40-B16	Screws For Computer	4		SC40-B53	Washer 5/16"	12
SC40-B17	M8 Bolt	1		SC40-B54	Shaft	1

Part List

Part No.	Description	Qty		Part No.	Description	Qty
SC40-B55	M10 Allen Key Screw	2		SC40-C26	Bushing	6
SC40-B56	Rod End Bearing	2		SC40-C27	Spacer for 6003 Bearing	2
SC40-B57	Washer 5/16"	4		SC40-C28	Disk Cover Plug	2
SC40-B58	Bolt M4x16mm	6		SC40-C29	Upholstered,Seat	1
SC40-B59	Nut M10	1		SC40-C30	Disk Cover /R	2
SC40-B60	Nut M10	1		SC40-C31	Bushing	8
SC40-B61	M8 Allen Key Bolt	1		SC40-C32	Nut Cap	8
SC40-B62	M16 Knob	1		SC40-C33	Foam Grip	2
SC40-B63	Nut M20	1		SC40-C34	Bushing	2
SC40-B64	M3 Bolt	2		SC40-C35	Upright Joint Cover/L	2
SC40-B65	Nut M10	2		SC40-C36	Upright Joint Cover/R	2
SC40-B66	Spring Washer M10	2		SC40-C37	Plug	2
SC40-B67	Spacer	4		SC40-C38	Left Upper Pivot Cover(Front	2
SC40-C01	Plug 1-1/4"	2		SC40-C39	Right Upper Pivot Cover(Front	2
SC40-C02	Main Cover /R	1		SC40-D01	Computer	1
SC40-C03	Main Cover /L	1		SC40-D02	Self powered Flywheel	1
SC40-C04	End Cap 4"	4		SC40-D03	Hand Pulse Sensor	1set
SC40-C05	Adjustable Foot Pad M8	4		SC40-D04	Motor with Cable	1
SC40-C06	Wheel-Stabilizer Front	2		SC40-D05	Quick Key /L (Cable) GO	1
SC40-C07	Right Foot Pedal	2		SC40-D06	Quick Key /R (Cable) UP/DOWN	1
SC40-C08	Cushion Pad	2		SC40-D07	Hand Pulse Sensor Cable I	1
SC40-C09	Belt	1		SC40-D08	Hand Pulse Sensor Cable II	1
SC40-C10	Upholstered, Backrest	1		SC40-D09	Hand Pulse Sensor Cable III	1
SC40-C11	Upright Tube Spacer	2		SC40-D10	Quick Key Cable /L	1
SC40-C12	Plug	5		SC40-D11	Quick Key Cable /R	1
SC40-C13	Rubber Grip	2		SC40-D12	Motor Tension Cable	1
SC40-C14	Upright Post Joint Cover-Right	1		SC40-D13	Control Board Cable	1
SC40-C15	Upright Post Joint Cover-Left	1		SC40-D14	Control Board (CB.)	1
SC40-C16	Plastic Pulley	8		SC40-D15	Sensor Cable	1
SC40-C17	Gripping Sheath	2		SC40-D16	Generator Cable	1
SC40-C18	Pvc Pad	4		SC40-D17	Upper Cable	1
SC40-C19	Plug	2		SC40-D18	Lower Cable	1
SC40-C20	Rotate Bar Wheel	2		SC40-E01	Bearing 6004	6
SC40-C21	Lower Rear Pivot Cover	2		SC40-E02	Bearing 6003	8
SC40-C22L	Right Lower Front Pivot Cover-L	1		SC40-E03	Bearing 608	16
SC40-C22R	Right Lower Front Pivot Cover-R	1		SC40-F01	Aluminum Rail /L	1
SC40-C23	Water Bottle Holder	1		SC40-F02	Aluminum Rail /R	1
SC40-C24	Bearing Bushing	2		SC40-F03	Ribbon	2
SC40-C25	Bearing Housing	2		SC40-F04	Aluminum Guide Rail	2

EXPLODED VIEW

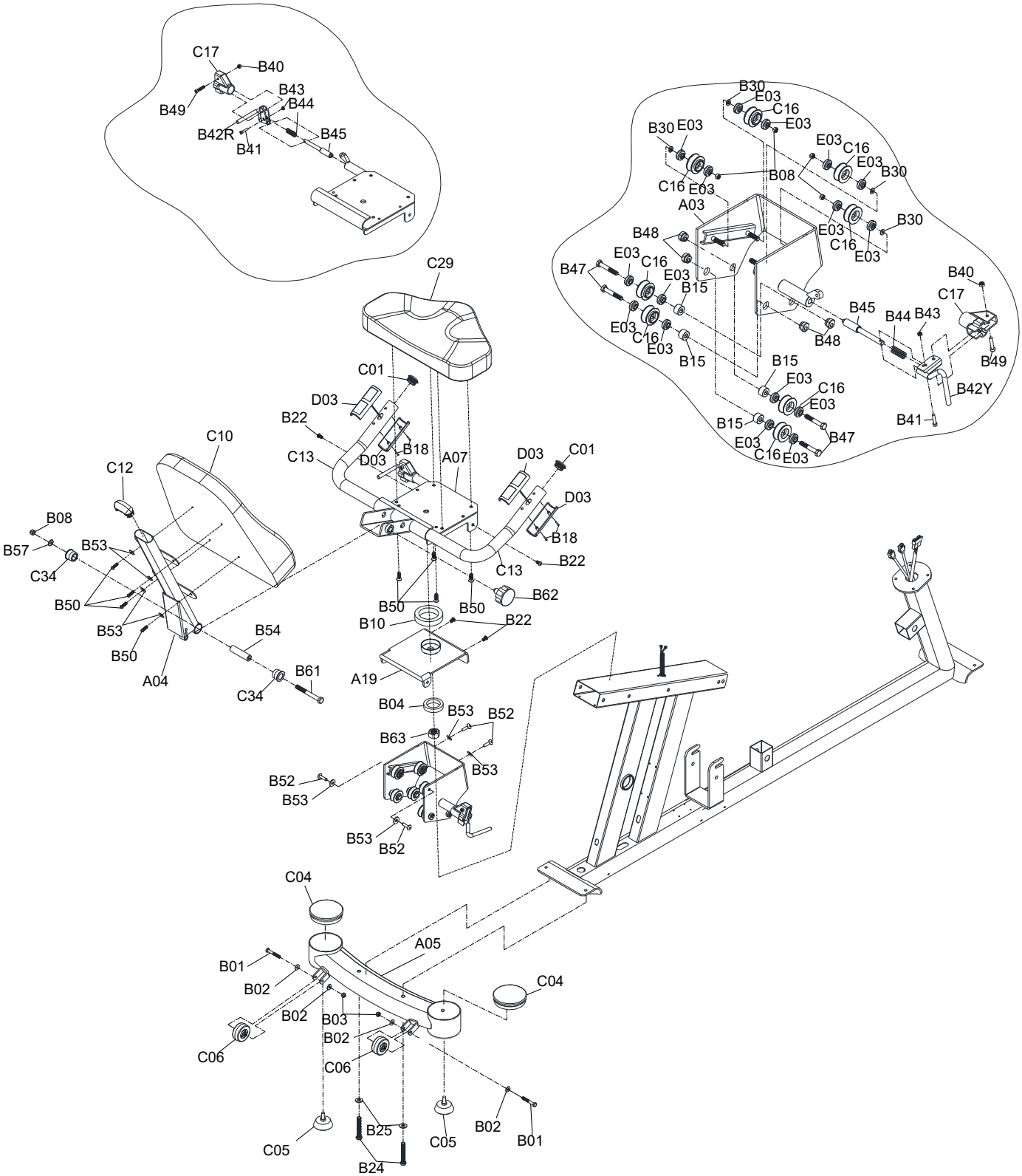

EXPLODED VIEW

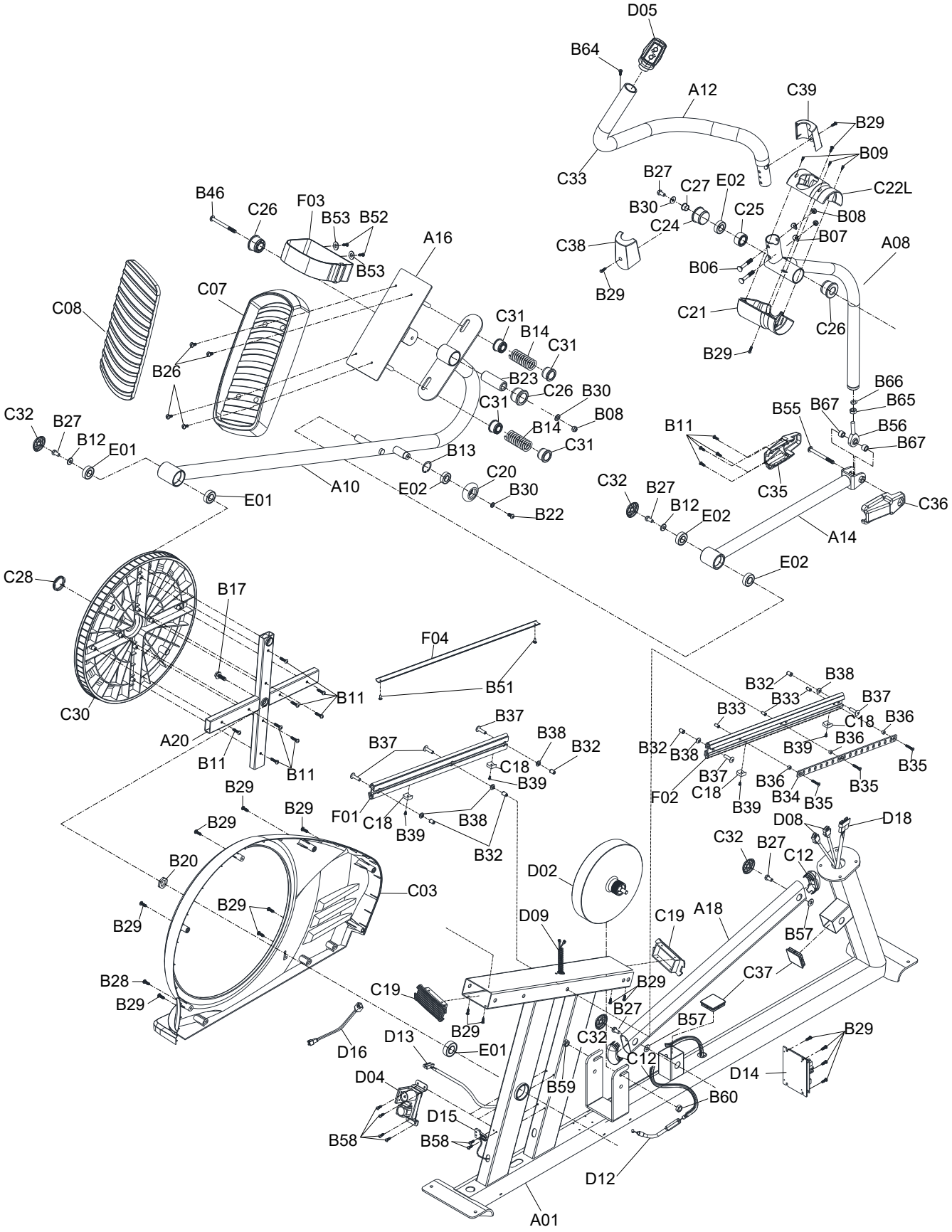

EXPLODED VIEW

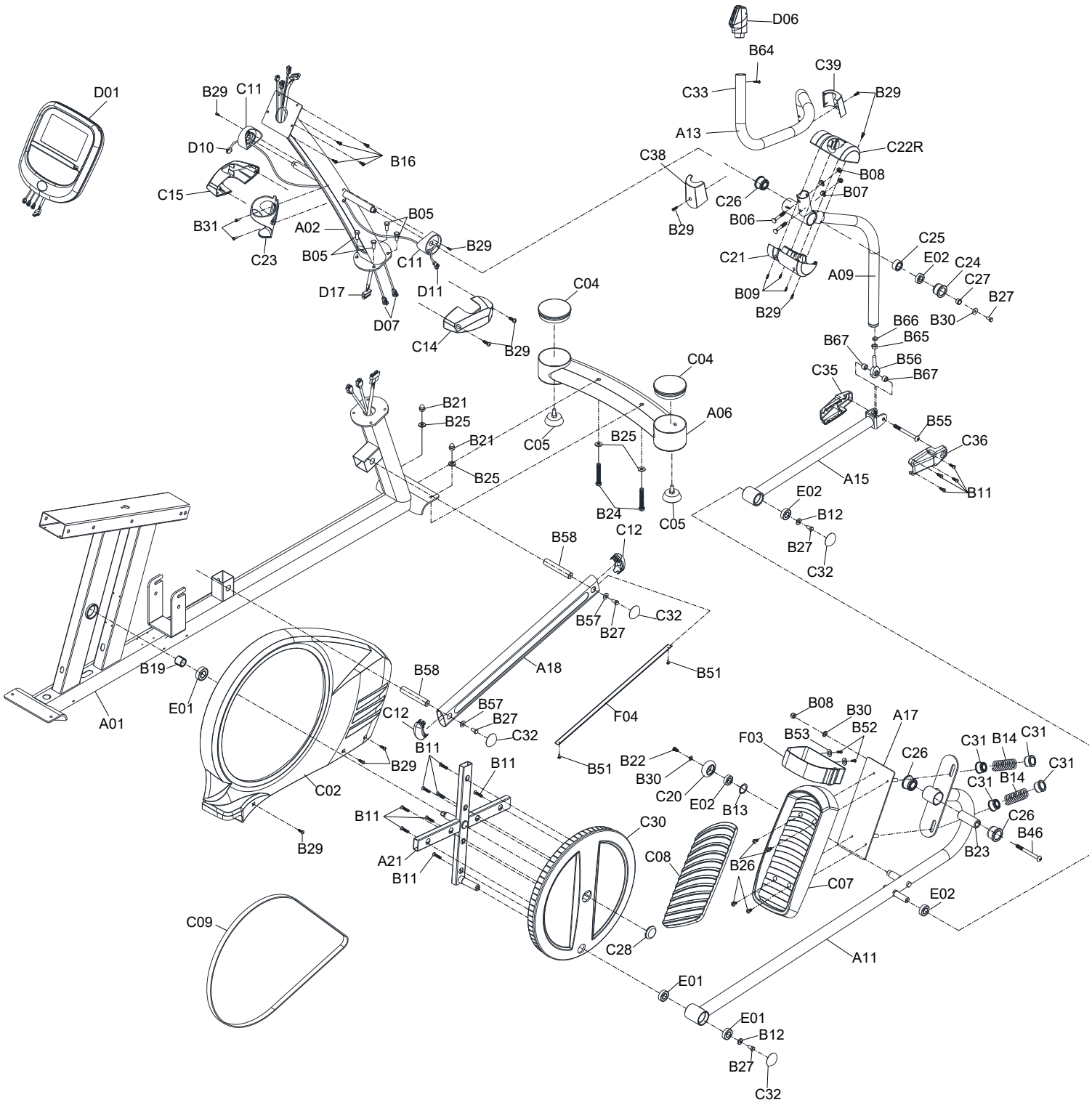

Memo

Memo

SCT400g WARRANTY

VALID FOR USA AND CANADA ONLY

(Please consult with your local distributor for warranty info specific to your region).

BODYCRAFT warrants its products to be free of defects in materials and workmanship for the time stated below to the original purchaser.

REGISTER your product at www.bodycraft.com or call our customer service department at 800-990-5556.

This warranty applies to Residential and Light Commercial use only.

Residential Warranty: Lifetime Frame, [7] Year(s) Parts, [1] Year(s) Wear Items and [2] Year(s) Labor.

Light Commercial Warranty: [10] Year(s) Frame, [3] Years Parts, 1 Year(s) Wear Items and [1] Year Labor.

This warranty is valid only in accordance with the following conditions:

- The warranty begins on the original purchase date at retail and ends when the original owner disposes of it, either through sale, gift, or otherwise. This warranty is not transferable and is only valid to the original purchaser.
- This warranty is available only for purchases made within and the original purchaser currently residing in the USA and Canada. Please consult with your local distributor for warranty info specific to your region.
- The product must have been registered within 30 days of the original purchase date or supply proof of purchase to validate warranty (original sales invoice).
- This warranty does not cover damage resulting from accident, misuse, water, tampering, unreasonable use, unauthorized repairs, improper repairs, alterations or normal wear and tear.

This warranty excludes the following:

1. The warranty does not cover normal maintenance or labor charges unless labor terms are listed above.
2. Normal cosmetic wear on parts such as paint, seat coverings, walk belts, pedal straps, wheels, foot rails, labels and logos.
3. Consumables such as batteries and heart rate belts that do not have a replaceable battery.
4. Eprom/Software version upgrades unless determined as necessary.
5. Any accessories not included in the original packaging.

If the item exhibits such a defect, BODYCRAFT will, at its option, repair or replace it without cost for parts. Shipping and handling charges may apply. (BODYCRAFT may require return of the part(s) or photographic evidence of the damaged part(s) prior to replacement). Serial number may be required. Parts repaired or replaced will be warranted for the remainder of the original warranty period only.

*This warranty is in lieu of all warranties, expressed or implied, and/or all other obligations or liabilities on our part and we neither assume nor authorize any person to assume for us any other obligation or liability in connection with the sale of your BodyCraft product. Under no circumstances shall we be liable by virtue of this warranty or otherwise for damage to any person or property whatsoever for any special, indirect, incidental, secondary or consequential damage of any nature whatsoever arising out of the use or inability to use the BodyCraft product.