BODYCRAFT

X4 COMMERCIAL MULTI-STATION GYM
ASSEMBLY MANUAL

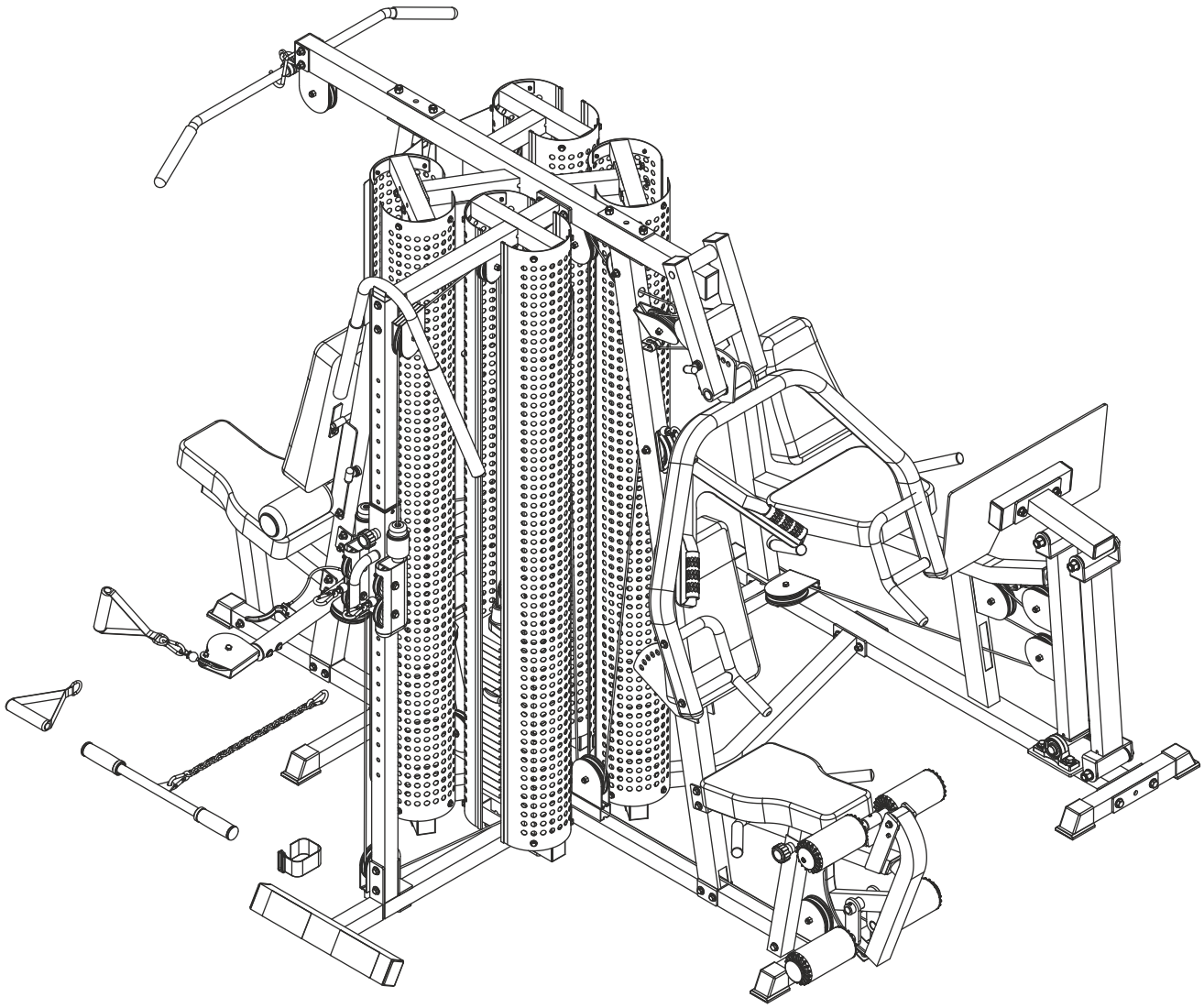

QUESTION?

As a quality home gym supplier we are committed to your complete satisfaction. If you have questions, or find missing or damaged parts, we will guarantee your complete satisfaction through our authorized dealer service centers or our home office customer service department. Please call your local dealer for assistance or BodyCraft at 800-990-5556 (9:00 AM - 5:00 PM). Our trained technicians will provide immediate assistance to you, free of charge.

Bodycraft is a division of Recreation Supply Inc.
P7699 Green Meadows Dr
Lewis Center, OH 43035

429E

BEFORE YOU BEGIN

Congratulations and thank you for selecting the **X4** strength training system. The **X4** offers an impressive array of strength training exercises to develop every major muscle group of the body. Whether your goal is cardiovascular fitness, a shapely, toned body or dramatic muscle size and strength, the **X4** will help you achieve the specific results you want.

For your safety and benefit, read this manual and the accompanying literature before using the **X4**. Keep this manual for future reference.

If you have additional questions, please call your local dealer or our customer service department at 800-990-5556 Monday through Friday, 9 a.m. until 5 p.m. Eastern Time.

IMPORTANT SAFETY NOTES

There is a risk assumed by individuals who use this type of equipment. Before beginning this or any other exercise program consult your physician. This is especially important for individuals over the age of 35 or persons with pre-existing health problems. Recreation Supply, Inc. assumes no responsibility for personal injury or property damage sustained by or through use of this product.

1. This product must be assembled on a flat, level surface to assure its proper function.
2. Clean pads and frame on a regular basis. We recommend warm, soapy water. Do not use harsh or abrasive chemicals.
3. Inspect and tighten all parts before every use. Replace any worn parts immediately. Failure to do so may result in serious injury.
4. Keep children away from the **X4** at all times.
5. Keep your hands away from cables and pulleys during operation. Keep your hands away from moving parts other than the designated handles.
6. When adjusting the seat, make sure the spring pin is fully engaged. If not, the seat may slip and cause serious injury.
7. Make certain all cables are seated within the pulleys before every use.
8. Exercise with care to avoid injury.
9. If unsure about the proper use of the **X4** strength training system call your local dealer or our customer service department at 800-990-5556.

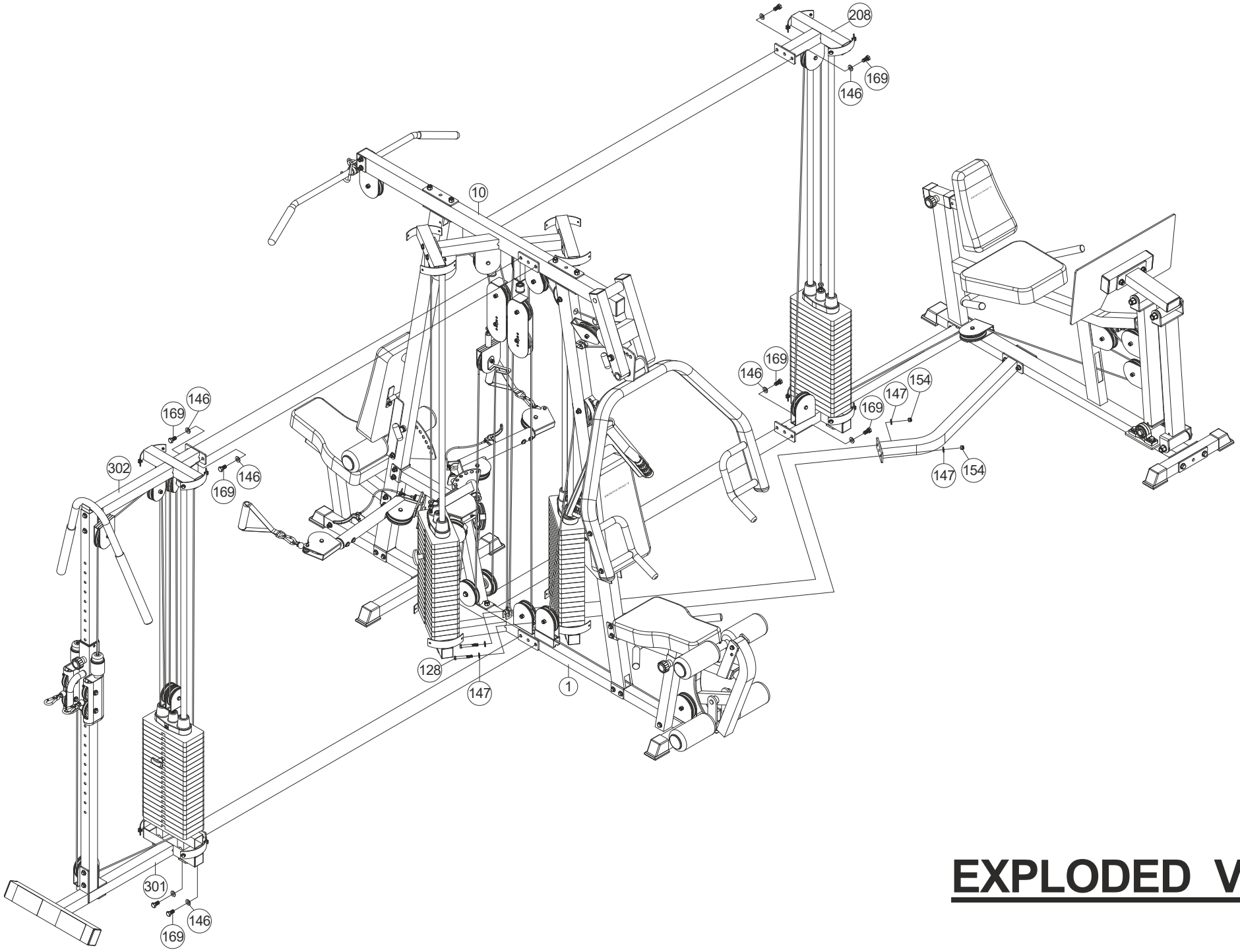

EXPLODED VIEW

OVERVIEW (3-1)

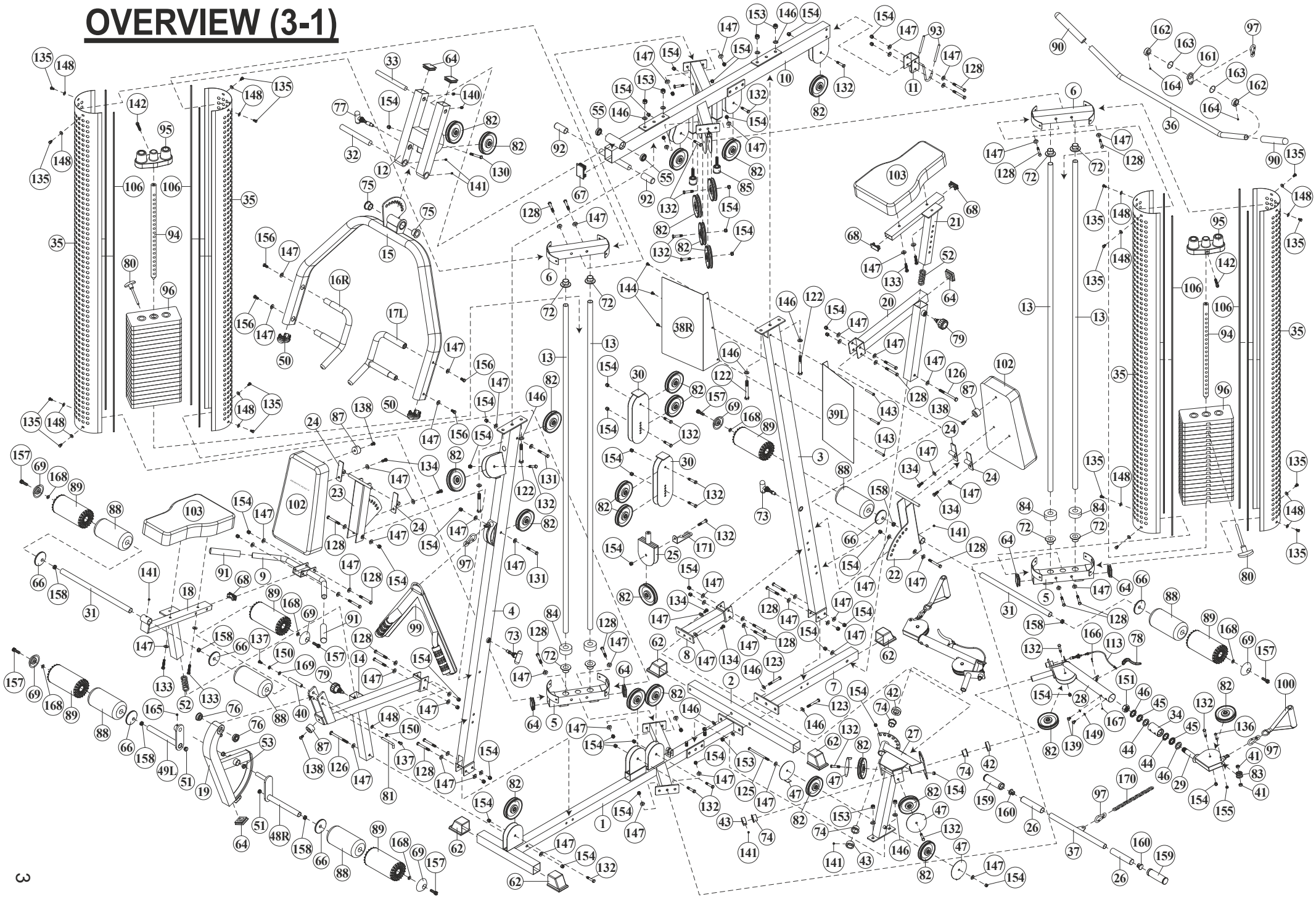

OVERVIEW (3-2)

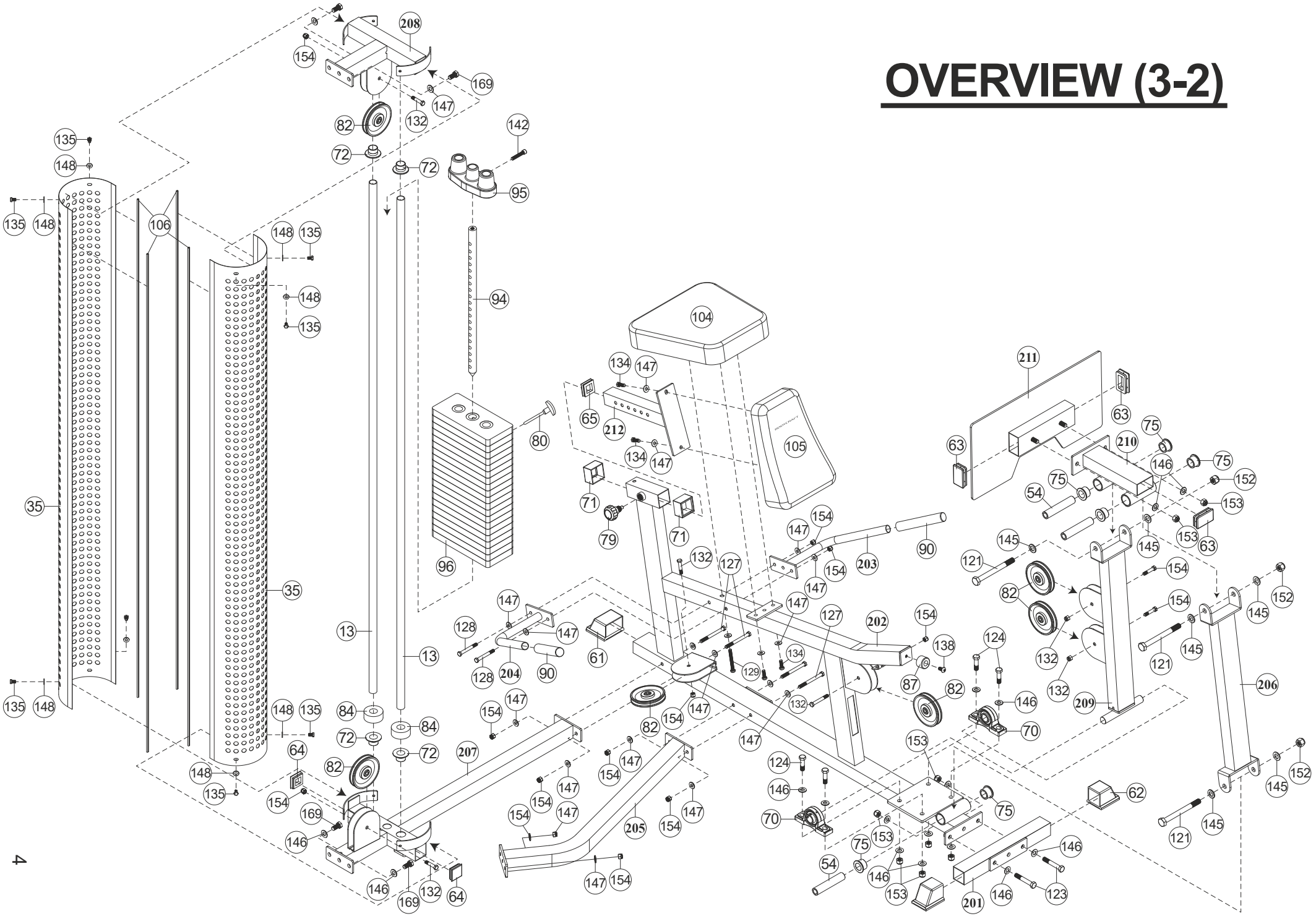

208
154
169
147
132
82
142
72
72
95
135
148
135
148
106
148
135
148
135
94
104
134
147
65
212
134
147
80
105
211
63
63
75
210
146
75
152
75
54
153
63
35
71
79
71
154
147
90
145
145
153
96
132
127
203
154
121
154
147
82
154
152
145
35
147
147
127
202
154
128
147
138
124
145
13
13
61
134
129
132
121
128
204
90
87
82
132
206
135
148
148
135
84
84
154
147
82
154
147
146
209
72
72
207
147
70
153
64
82
154
147
124
146
152
148
135
154
147
154
147
62
145
154
169
154
147
205
154
147
70
75
146
121
146
153
75
146
54
146
169
132
64
147
154
153
201
146
123

OVERVIEW (3-3)

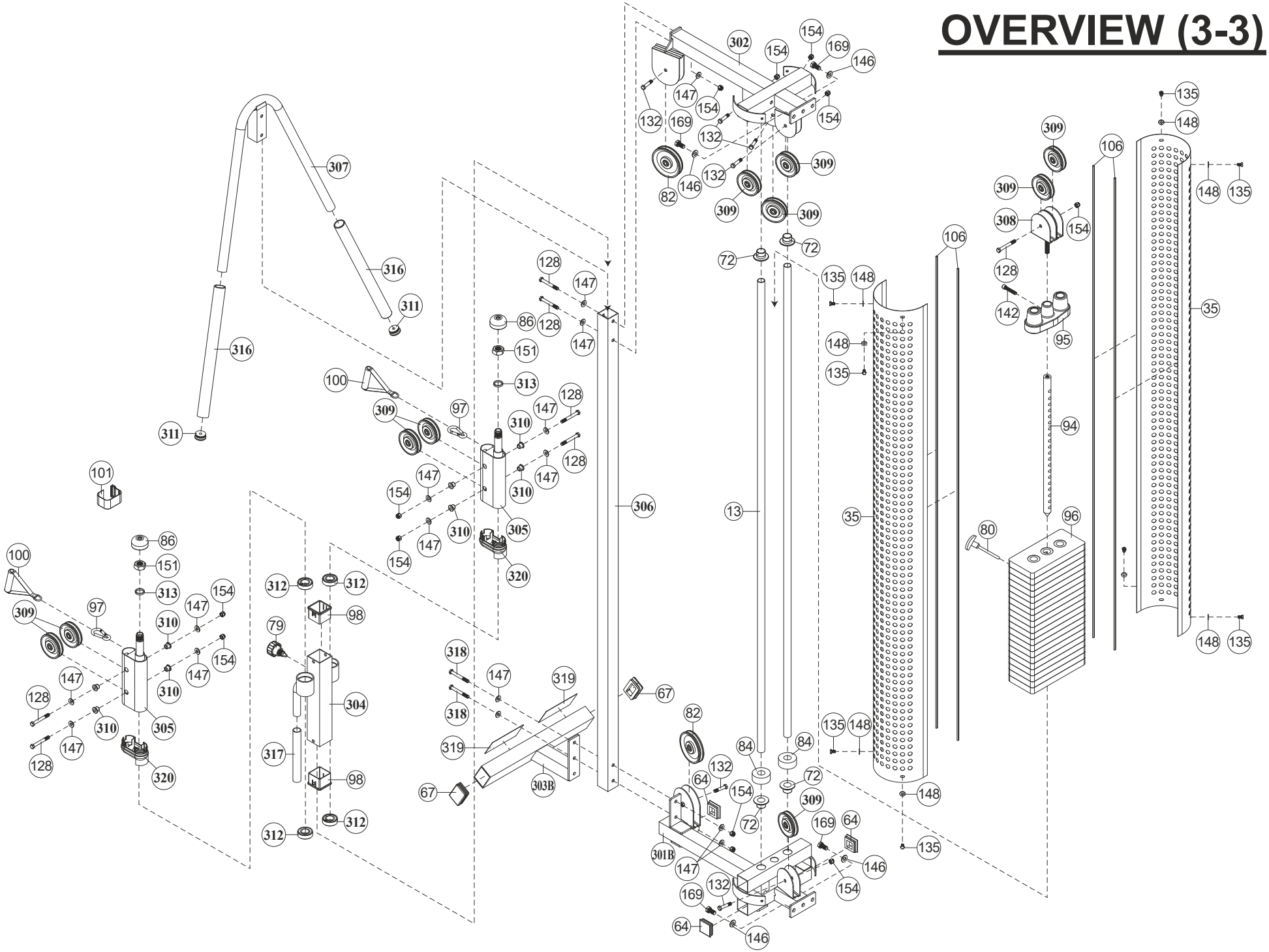

302
154
169
146
147
132
82
309
72
135
148
106
308
142
95
35
94
96
80
13
306
67
307
316
311
100
97
86
151
313
310
305
320
101
312
98
79
304
317
318
319
303B
301B
64
84

PARTS CHART

NO.	DESCRIPTION	QTY.
1	BASE FRAME	1
2	BASE STABILIZER	1
3	REAR CABLE ARM UPRIGHT	1
4	FRONT PRESS ARM UPRIGHT	1
5	WEIGHT STACK BASE	2
6	TOP GUIDE ROD RETAINER	2
7	FRONT STABILIZER	1
8	CABLE ARM CONNECTOR	1
9	HAND HOLDER	1
10	TOP FRAME (bearing pre-installed)	1
11	LAT BAR HOLDER	1
12	PRESS ARM SELECTOR	1
13	GUIDE ROD	4
14	FRONT SEAT FRAME	1
15	PRESS ARM	1
16R	RIGHT HANDLE OF PRESS ARM	1
17L	LEFT HANDLE OF PRESS ARM	1
18	FRONT CHROME SEAT ADJUSTER	1
19	LEG EXTENSION ARM (bearing pre-installed)	1
20	REAR SEAT FRAME	1
21	REAR CHROME SEAT ADJUSTER	1
22	SEAT BACK ADJUSTER	1
23	SEAT BACK ADJUSTER	1
24	METAL HINGE FOR SEAT BACK ADJUSTER	4
25	SINGLE PULLEY BLOCK	1
26	SLEEVE	2
27	CABLE ARM ASSEMBLY	1
28	CABLE ARM	2
29	SWIVEL CABLE ARM TOP	2
30	ADJUSTABLE PULLEY BLOCK	2
31	1" CHROME ROLLER TUBE	2
32	25.4mm PIVOT AXLE	1
33	20mm PIVOT AXLE	1
34	CABLE ARM COLLAR	2
35	WEIGHT STACK SHROUD	4
36	LAT BAR	1
37	LOW ROW BAR	1
38R	RIGHT POSTER PLATE	1
39L	LEFT POSTER PLATE	1
40	LEG EXTENSION AXLE	1
41	608ZB BEARING	4
42	STEEL SPACER (all pre-assembled)	2
43	AXLE COLLAR (all pre-assembled)	2
44	BEARING BASIN (all pre-assembled)	4
45	BEARING (all pre-assembled)	4
46	BEARING COVER (all pre-assembled)	4
47	PULLEY GUIDE BRACKET	4
48R	RIGHT LEG EXTENSION ARM	1
49L	LEFT LEG EXTENSION ARM	1
50	PRESS ARM PLUG	2
51	1" PLUG	2
52	SEAT SPRING	2
53	3/4" BUSHING	2
55	37mm OD. BEARING	2

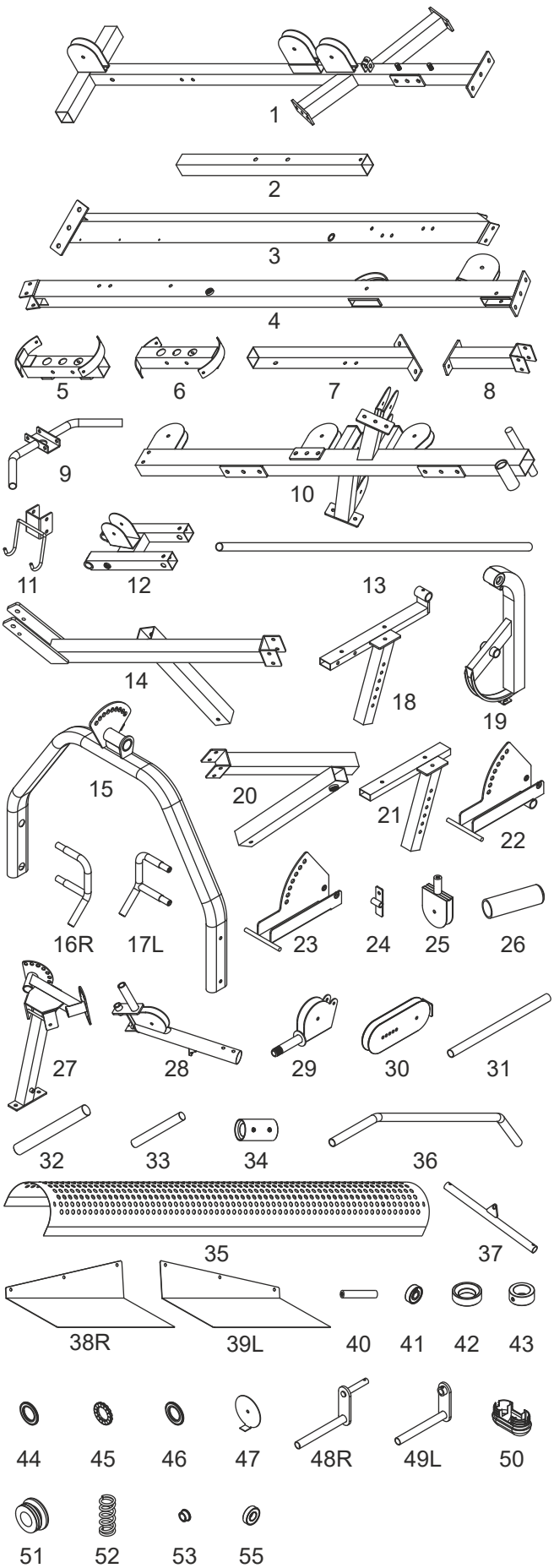

PARTS CHART

NO.	DESCRIPTION	QTY.
62	50mm SQ. CAP	5
64	50mm SQ. PLUG	8
66	PLASTIC WASHER	6
67	50 X 75mm RECT. PLUG	1
68	25 X 50mm RECT. PLUG	3
69	PLASTIC COVER	6
72	PLASTIC GUIDE ROD HOLDER	8
73	SHORTER POP PIN(one pcs. pre-assembled)	2
74	28.6mm STEEL BUSHING(all pre-assembled)	4
75	25.4mm STEEL BUSHING(all pre-assembled)	2
76	1/2" X 1-1/8" BEARING(all pre-assembled)	2
77	LONGER POP PIN(one pcs. pre-assembled)	1
78	CLUTCH LEVER OF CABLE ARM	2
79	SPRING KNOB	2
80	SELECTOR PIN	2
81	L PIN	1
82	114mm PULLEY(four pcs. pre-assembled)	28
83	SMALL PULLEY IN SWIVEL ARM (all pre-assembled)	2
84	RUBBER DONUT	4
85	ADJUSTABLE STOPPER(all pre-assembled)	2
87	STOPPER(all pre-assembled)	3
88	FOAM PAD	6
89	COVER OF FOAM PAD	6
90	1" X 200mm HAND GRIP(all pre-assembled)	2
91	1" X 140mm HAND GRIP(all pre-assembled)	2
92	1" X 70mm PRESS ARM STOPPER (all pre-assembled)	2
93	LAT BAR HOLDER COVER(95mm) (all pre-assembled)	2
94	SELECTOR ROD	2
95	TOP PLATE	2
96	10 LB. PLATE	38
97	SNAP HOOK	5
99	AB CRUNCH STRAP	1
100	SINGLE HANDLE	2
102	BACK PAD	2
103	SEAT PAD	2
106	TRIM FOR WEIGHT SHROUD	8
107	PRESS ARM CABLE	1
108	AB CRUNCH CABLE	1
109	TOP CABLE	1
110	CABLE ARM CONNECTING CABLE	1
111	CABLE ARM CABLE(pre-assembled)	1
112	REMOVABLE END CABLE ARM CABLE (pre-assembled)	1
113	CLUTCH CABLE	2

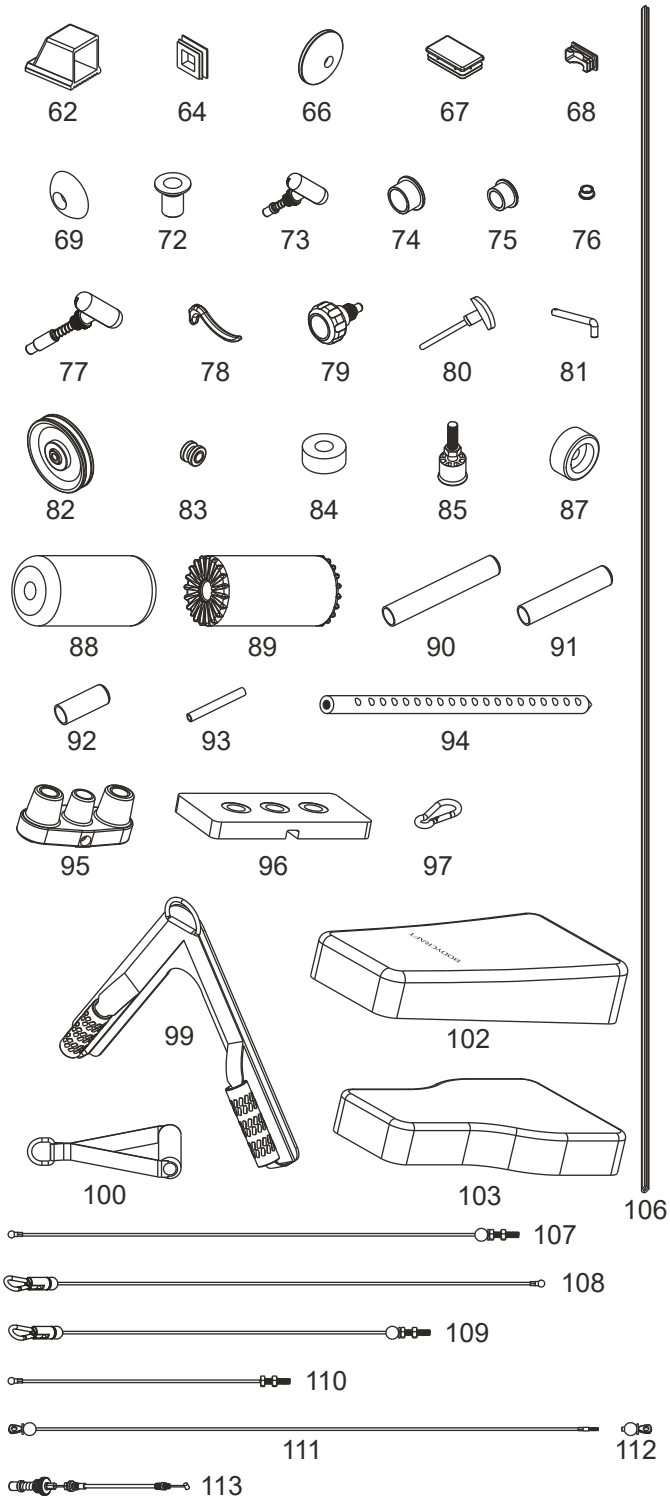

PARTS CHART

NO.	DESCRIPTION	QTY.
122	1/2" X 4-1/4" HEX BOLT	4
123	1/2" X 3-1/4" HEX BOLT	2
125	3/8" X 5-3/4" HEX BOLT	1
126	3/8" X 4-3/4" HEX BOLT	2
128	3/8" X 3" HEX BOLT	24
130	3/8" X 2-3/4" HEX BOLT	1
131	3/8" X 2-1/2" HEX BOLT	2
132	3/8" X 1-3/4" HEX BOLT(four pcs. pre-assembled)	22
133	3/8" X 1-3/4" HEX THREADED BOLT	4
134	3/8" X 1" HEX THREADED BOLT	6
135	5/16" X 1/2" HEX THREADED BOLT	16
136	5/16" X 1-1/2" SET SCREW(all pre-assembled)	2
137	5/16" X 5/8" SET SCREW(all pre-assembled)	2
138	3/8" X 3/4" INNER SET SCREW(all pre-assembled)	3
139	3/8" X 1/2" ROUND BOLT(all pre-assembled)	4
140	3/8" X 5/8" SET SCREW(al pre-assembled)	2
141	5/16" X 1/4" SET SCREW(all pre-assembled)	6
142	TOP PLATE BOLT	2
143	8mm X 53mm FEMALE BOLT FOR POSTER	3
144	6mm X 12mm MALE NUT FOR POSTER	3
146	1/2" WASHER(four pcs. pre-assembled)	14
147	3/8" WASHER	72
148	5/16" WASHER(two pcs. pre-assembled)	18
149	3/8" SPRING WASHER(all pre-assembled)	4
150	5/16" SPRING WASHER(all pre-assembled)	2
151	24mm NYLON NUT(all pre-assembled)	2
153	1/2" NYLON NUT(four pcs. pre-assembled)	8
154	3/8" NYLON NUT(four pcs. pre-assembled)	50
155	5/16" NYLON NUT(all pre-assembled)	2
156	3/8" X 1" INNER HEX SCREW	4
157	5/16" X 32mm SUNKEN HEAD SCREW	6
158	5/16" NUT	6
159	1-1/4" HAND GRIP	2
160	1" T SHAPE END PLUG	2
161	HOOK PLATE	1
162	COLLAR	2
163	SEALING RING	2
164	M6 SET SCREW	2
165	5/16" X 1/2" SET SCREW	1
166	M5 X 18mm ROUND HEAD SCREW	2
167	M5 NYLON NUT	2
168	5/16" LARGER WASHER	6
170	LINK CHAIN	1
171	CABLE GUIDE PLATE	1

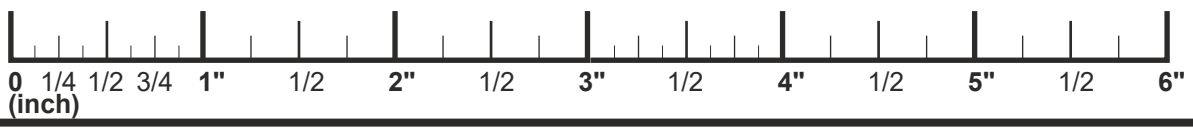

PARTS CHART

NO.	DESCRIPTION	QTY.
201	BASE STABILIZER	1
202	LEG PRESS MAIN FRAME	1
203	LEFT LEG PRESS HANDLE	1
204	RIGHT LEG PRESS HANDLE	1
205	LONG LEG PRESS CONNECTOR	1
206	FRONT LEG PRESS SUPPORT	1
207	WEIGHT BASE CONNECTOR	1
208	WEIGHT STACK BASE	1
209	REAR LEG PRESS SUPPORT	1
210	FOOT PLATE CONNECTOR	1
211	FOOT PLATE	1
212	BACK PAD ADJUSTER	1
213	LEG PRESS CABLE	1
13	GUIDE ROD	2
35	WEIGHT STACK SHROUD	2
54	LEG PRESS AXLE	3
61	45 X 75mm RECT. CAP	1
62	50mm SQ. CAP	2
63	45 X 75mm RECT. PLUG	3
64	50mm SQ. PLUG	2
65	45mm SQ. PLUG	1
70	BEARING HOUSING(all pre-assembled)	2
71	SPACER	2
72	PLASTIC GUIDE ROD HOLDER	4
75	25.4mm STEEL BUSHING(all pre-assembled)	6
79	SPRING KNOB	1
80	SELECTOR PIN	1
82	114mm PULLEY(four pcs. pre-assembled)	6
84	RUBBER DONUT	2
87	STOPPER(all pre-assembled)	1
90	1" X 200mm HAND GRIP(all pre-assembled)	2
94	SELECTOR ROD	1
95	TOP PLATE	1
96	10 LB. PLATE	19
104	BACK PAD	1
105	SEAT PAD	1
106	TRIM FOR WEIGHT SHROUD	4
121	5/8" X 6-1/2" HEX BOLT	3
123	1/2" X 3-1/8" HEX BOLT	2
124	1/2" X 1-3/4" HEX BOLT	4
127	3/8" X 4-1/4" HEX BOLT	4
128	3/8" X 3" HEX BOLT	2
129	3/8" X 2-3/4" HEX THREADED BOLT	1
132	3/8" X 1-3/4" HEX BOLT(four pcs. pre-assembled)	6
134	3/8" X 1" HEX THREADED BOLT	4
135	5/16" X 1/2" HEX THREADED BOLT	8
138	3/8" X 3/4" SET SCREW(all pre-assembled)	1
142	TOP PLATE BOLT	1
145	5/8" WASHER	6
146	1/2" WASHER(four pcs. pre-assembled)	18
147	3/8" WASHER	17
148	5/16" WASHER(two pcs. pre-assembled)	8
152	5/8" NYLON NUT	3
153	1/2" NYLON NUT(four pcs. pre-assembled)	8
154	3/8" NYLON NUT(four pcs. pre-assembled)	12
169	1/2" X 1-1/4" HEX THREADED BOLT	4

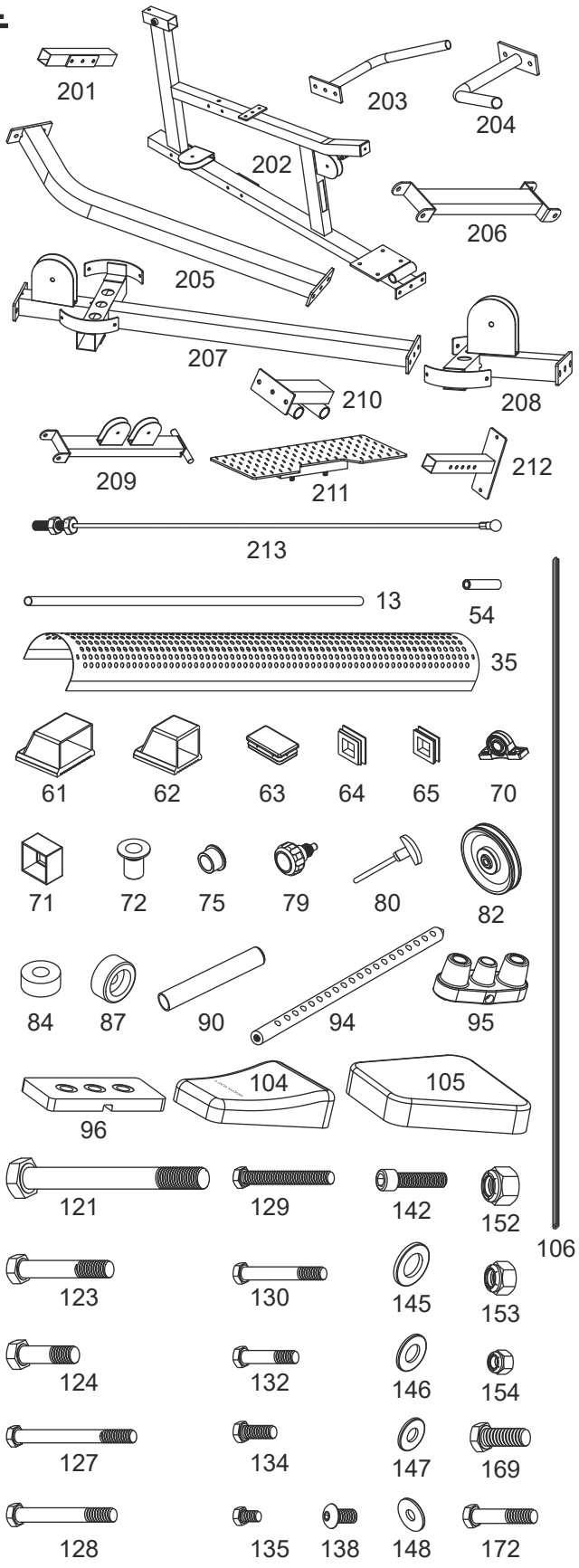

PARTS CHART

NO.	DESCRIPTION	QTY.
301	WEIGHT STACK BASE	1
302	TOP GUIDE ROD RETAINER	1
303	FRONT STABILIZER	1
304	CABLE HEIGHT ADJUSTER	1
305	SWIVEL PULLEY BRACKET	2
306	CHROMED UPRIGHT	1
307	HAND HOLDER	1
308	DOUBLE PULLEY BRACKET	1
309	90mm PULLEY	10
310	3/8" BUSHING	8
311	1-1/4" PLUG	2
312	6205Z BEARING	4
313	STEEL SPACER(all pre-assembled)	2
314	CABLE COLUMN CABLE	1
315	REMOVABLE END CABLE ARM CABLE	1
316	HAND GRIP	2
317	1" X 210mm HAND GRIP(all pre-assembled)	1
318	3/8" X 3-1/8" HEX HEAD BOLT	2
319	NONSLIP	2
320	50 X 100mm ELLIPTIC PLUG	2
13	GUIDE ROD	2
35	WEIGHT STACK SHROUD	2
64	50mm SQ. PLUG	3
67	50 X 75mm RECT. PLUG	2
72	PLASTIC GUIDE ROD HOLDER	4
79	LOCKING SPRING KNOB	1
80	SELECTOR PIN	1
82	114mm PULLEY(four pcs. pre-assembled)	2
84	RUBBER DONUT	2
86	CAP	2
94	SELECTOR ROD	1
95	TOP PLATE	1
96	10 LB. PLATE	19
97	SNAP HOOK	2
98	PLASTIC BUSHING	2
100	SINGLE HANDLE	2
101	ANKLE STRAP	1
106	TRIM FOR WEIGHT SHROUD	4
128	3/8" X 3" HEX BOLT	7
132	3/8" X 1-3/4" HEX BOLT(four pcs. pre-assembled)	6
135	5/16" X 1/2" HEX THREADED BOLT	8
142	TOP PLATE BOLT	1
146	1/2" WASHER	4
147	3/8" WASHER	15
148	5/16" WASHER(two pcs. pre-assembled)	8
151	24mm NYLON NUT(all pre-assembled)	2
154	3/8" NYLON NUT(four pcs. pre-assembled)	14
169	1/2" X 1-1/4" HEX THREADED BOLT	4

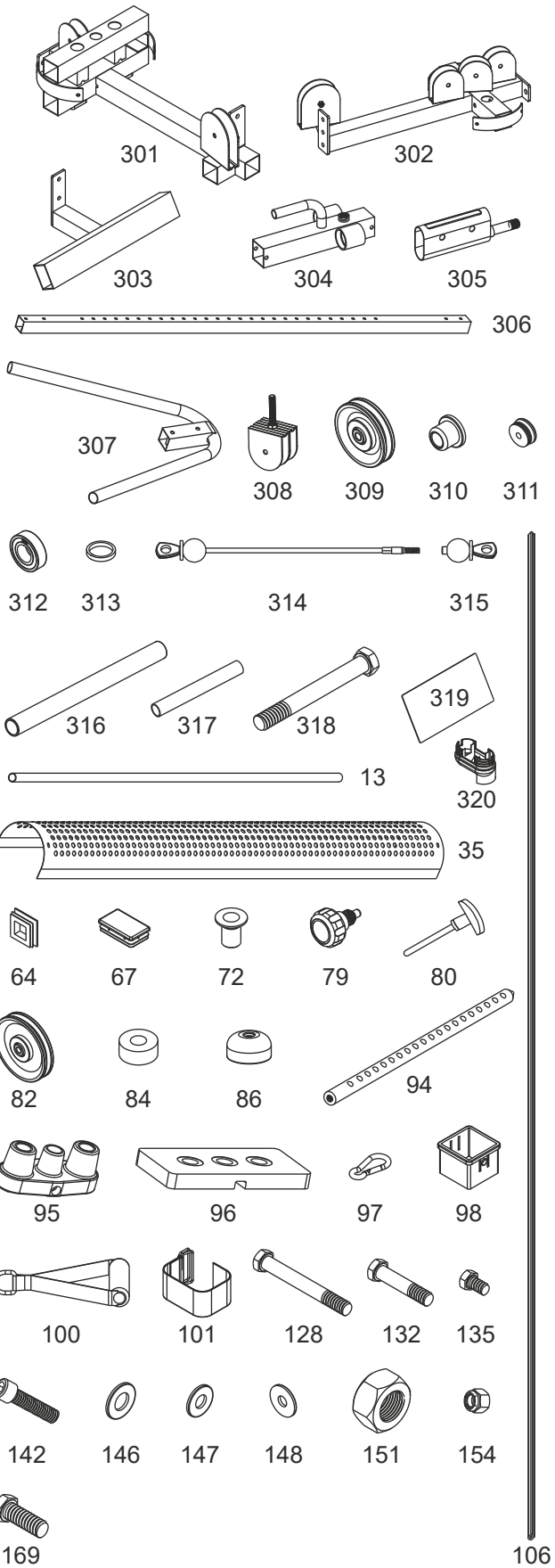

STEP 1 BASE FRAME ASSEMBLY

To ease the assembly process, do not tighten bolts until instructed.

1. Attach Base Frame (1) and Front Stabilizer (7) to Base Stabilizer (2), using two 1/2" X 3-1/4" Hex Head Bolts (123), four 1/2" Washers (146) and two 1/2" Nuts (153). Attach five 50mm SQ. Caps (62) onto Front & Rear Base Frame (1 & 7) and Base Stabilizer (2).
2. Attach two Weight Stack Bases (5) to Base Frame (1) using two 3/8" X 3" Hex Bolts (128), two 3/8" Washers (147) and two 3/8" Nylon Nuts (154).
3. Attach Front Upright (4) to Base Frame (1) using two 3/8" X 3" Hex Head Bolts (128), four 3/8" Washers (147) and two 3/8" Nylon Nuts (154).
   Repeat same process for Rear Upright (3) on Front Stabilizer (7). Screw Shorter Pop Pins (73) into Front Upright (4) and Rear Upright (3) as shown.

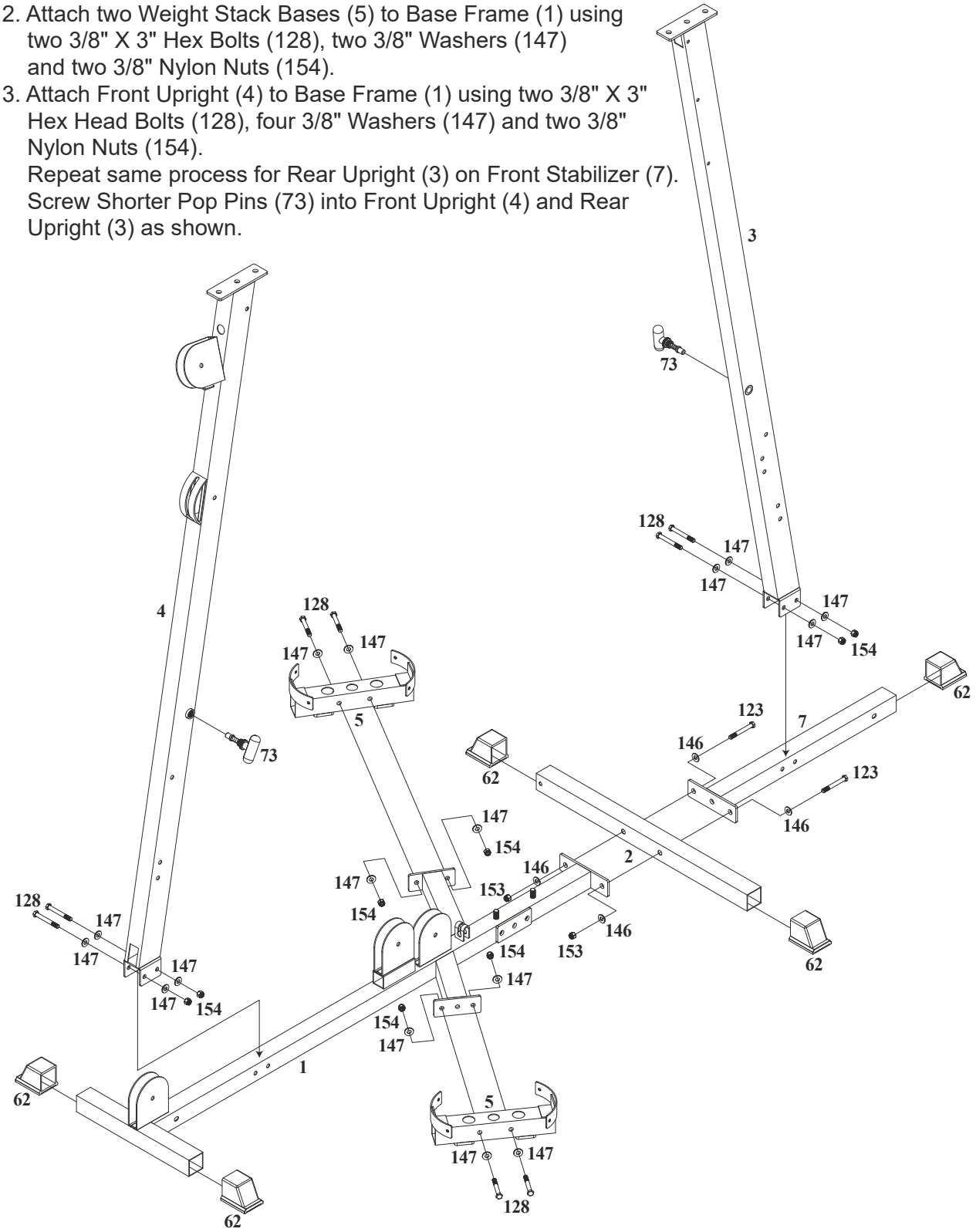

STEP 2 TOP FRAME ASSEMBLY

1. Attach Top Frame - bearing pre-installed (10) to Front & Rear Uprights (3 & 4) using two 1/2" X 4-1/4" Hex Bolts (122), four 1/2" Washers (146) and two 1/2" Nylon Nuts (153). Attach Lat Bar Holder (11) to Top Frame - bearing pre-installed (10) using two 3/8" X 3" Hex Bolts (128), four 3/8" Washers (147) and two 3/8" Nylon Nuts (154).
2. Attach four 50mm SQ. Plugs (64) and insert four Plastic Guide Rod Holders (72) to both Weight Stack Bases (5). Slide two Rubber Donuts (84) onto one end of each Guide Rod (13) and then insert Guide Rod (13) into the Plastic Guide Rod Holders (72) in Weight Stack Bases (5) as shown.
3. Slide each 10 LB Plate (96) over Guide Rods (13). Make certain that each plate is oriented with selector hole on bottom and facing forward. Attach Top Plate (95) to Selector Rod (94) using Top Plate Bolt (142). Slide Top Plate (95) and Selector Rod (94) over Guide Rods (13). Insert Plastic Guide Rod Holders (72) into both Top Guide Rod Retainers (6) and then slide both Top Guide Rod Retainers (6) over top of Guide Rods (13) and attach to Top Frame - bearing pre-installed (10), using two 3/8" X 3" Hex Head Bolts (128), four 3/8" Washers (147) and two 3/8" Nylon Nuts (154). Refer to drawing to be certain each Top Guide Rod Retainers (6) is on proper side.
4. Attach pre-assembled Cable Arm Assembly (27) to Cable arm Connector (8) using two 3/8" X 1" bolts (134) and two 3/8" Washes (147). Attach Cable Arm Connector (8) to Rear Upright (3), using two 3/8" X 3" Hex Head Bolts (128), four 3/8" Washers (147) and two 3/8" Nylon Nuts (154). Attach pre-assembled Cable Arm Assembly (27) to Base Frame (1) using two 1/2" Washers (146) and two 1/2" Nylon Nuts (153) onto pre-welded bolts on Base Frame (1). Remember to keep all bolts loose to ensure holes will align easily.
5. Slide the axle of each Cable Arm (28) through the hole in selector plate of Cable Arm Assembly (27) and fasten using Axle Collar (43) with 5/16" X 1/4" pre-inserted Set Screw (141).

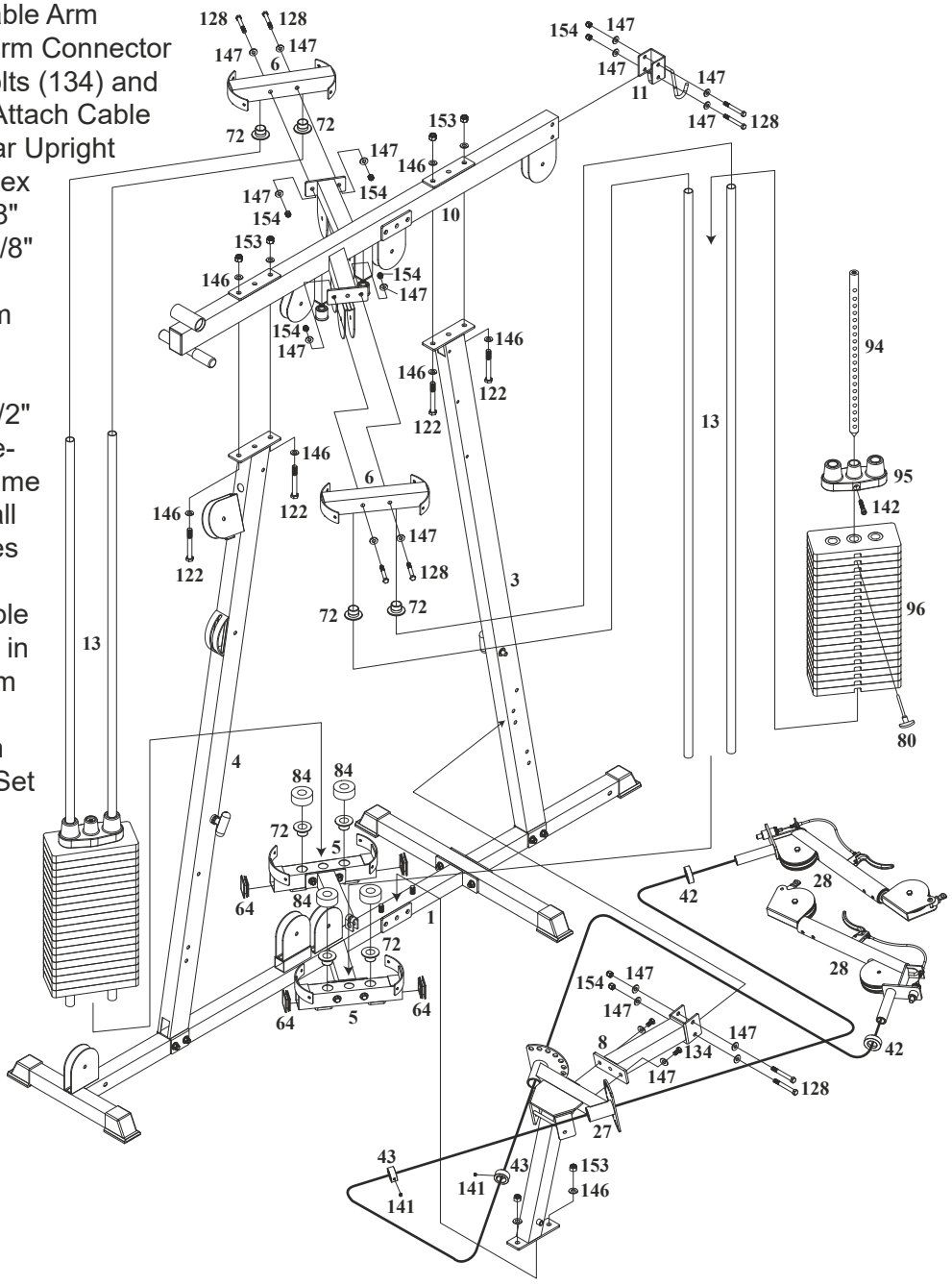

STEP 3 SEATS AND BACK PADS ASSEMBLY

1. Attach Front Seat Frame (14) to Front Upright (4) using two 3/8" X 3" Hex Head Bolts (128), four 3/8" Washers (147) and two 3/8" Nylon Nuts (154). Attach Front Seat Frame (14) to Base Frame (1) using one 3/8" X 4-3/4" Hex Head Bolt (126), two 3/8" Washers (147) and one 3/8" Nylon Nut (154).
2. Attach Leg Extension Arm with bearing pre-installed (19) to Front Seat Frame (14) by aligning holes and then inserting Leg Extension Axle (40). Fasten Leg Extension Axle (40) using two 5/16" Washers (148), two 5/16" Spring Washers (150) and two 5/16" X 5/8" Set Screws (137). Attach a 50mm S.Q. Plug (64) to top the bottom of Leg Extension Arm - bearing re-installed (19). Check to ensure that Leg Extension Arm - bearing pre-installed (19) pivots freely. Note: The L Pin (81) is used to lock the Leg Extension Arm - bearing pre-installed (19) into place. Attach the Right & Left leg extension arms (48R & 49L) to the Leg Extension Arm (19) by 5/16" X 1/2" Set Screw (165). Moisten the center of two Cover of Foam Pad (88) and slide onto each end of the Right & Left Leg Extension Arms (48R & 49L). Attach Plastic Washers (66) inside and Dome Washers (69) outside of Foam Pad (88) and secure the pads with 5/16" X 32mm Sunken Screw (157).
3. Attach Hand Holder (9) to Front Chromed Seat Adjuster (18) using two 3/8" X 3" Hex Bolts (128), four 3/8" Washers (147) and two 3/8" Nuts (154). Attach Seat Pad (103) to Front Chrome Seat Adjuster (18) using two 3/8" Washers (147) and two 3/8" X 1-3/4" Bolts (133). Attach 25 X 50mm Rect. Plug (68) to rear of Front Chrome Seat Adjuster (18). Insert Front Chrome Seat Adjuster (18) into the Front Seat Frame (14) and lock into place with Locking Spring Knob (79).
4. Insert 1" Chrome Roller Tube (31) into hole in Front Chrome Seat Adjuster (18). Moisten Foam Pads (88) with water and slide onto each end of 1" Chrome Roller Tube (31). Attach Plastic Washer (66) to inside and Dome Washers (69) outside of Cover of Foam Pad (88) and secure the Pads using 5/16" X 32mm Sunken Head Screw (157). A Rubber Mallet is useful. Lock 1" Chrome Roller Tube (31) into place with pre-installed set screw.
5. Attach Seat Back Adjuster (23) to Front Upright (4), using one 3/8" X 3" Hex Head Bolt (128) and one 3/8" Nylon Nut (154). It may be necessary to tighten this bolt, then loosen just enough to let Seat Back Adjuster (23) pivot freely. Shorter Pop Pin (73) should seat into adjustment holes in Seat Back Adjuster (23). Slide two Metal Hinges (24) to axle on top of Seat Back Adjuster (23), then attach Back Pad (102) to Metal Hinges (24) using two 3/8" Washers (147) and two 3/8" X 1" Bolts (134).
6. Attach Rear Seat Frame (20), Rear Chrome Seat Adjuster (21), Seat Back Adjuster (22) and pads using the same procedure as above for front seat. Insert 1" Chrome Roller Tube (31) into hole in Seat Back Adjuster (22). Moisten two Foam Pads (88) with water and slide onto each end of 1" Chrome Roller Tube (31). Attach Plastic Washers (66) to inside of Cover of Foam Pad (89) and secure the Pads with Plastic Cover (69) using 5/16" X 32mm Sunken Head Screw (157). Lock into place with pre-installed Set Screw (141).

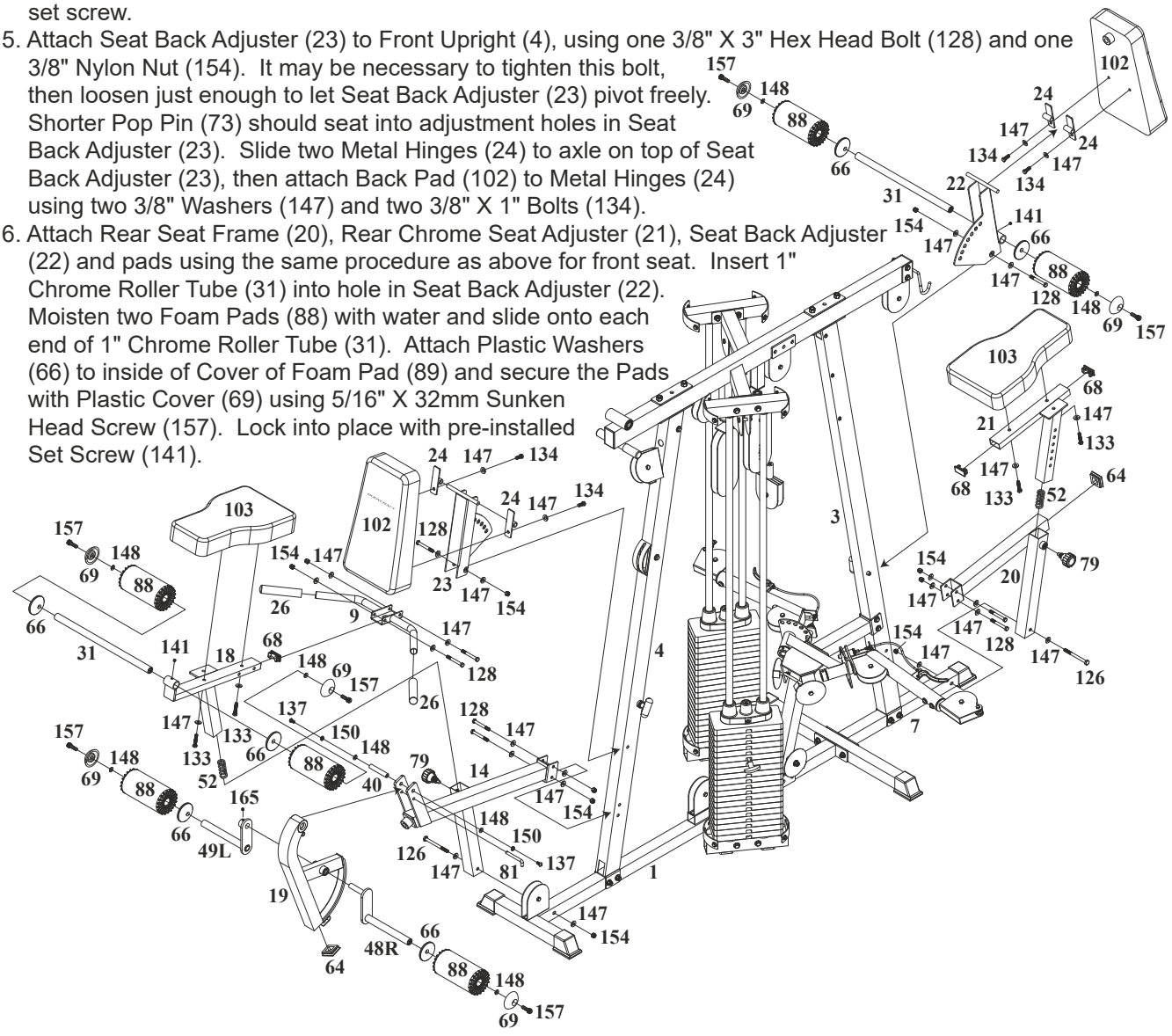

STEP 4 BENCH PRESS ASSEMBLY

1. Attach Press Arm Selector (12) to Top Frame - bearing pre-installed (10) by aligning holes and inserting 1" Pivot Axle (33). Lock into place with pre-installed set screw.
2. Attach Press Arm (15) to Press Arm Selector (12) by aligning holes and inserting 1" Pivot Axle (33), 19.95mm Axle (33A). Lock into place with pre-installed set screw. Attach 50mm SQ. Plugs (64) onto top ends Press Arm Selector (12) and two Press Arm Plugs (50) onto ends of Press Arm (15).
3. Check Longer Pop Pin (77) into Press Arm Selector (12), making sure Pop Pin (77) seats into adjustment holes in Press Arm (15).

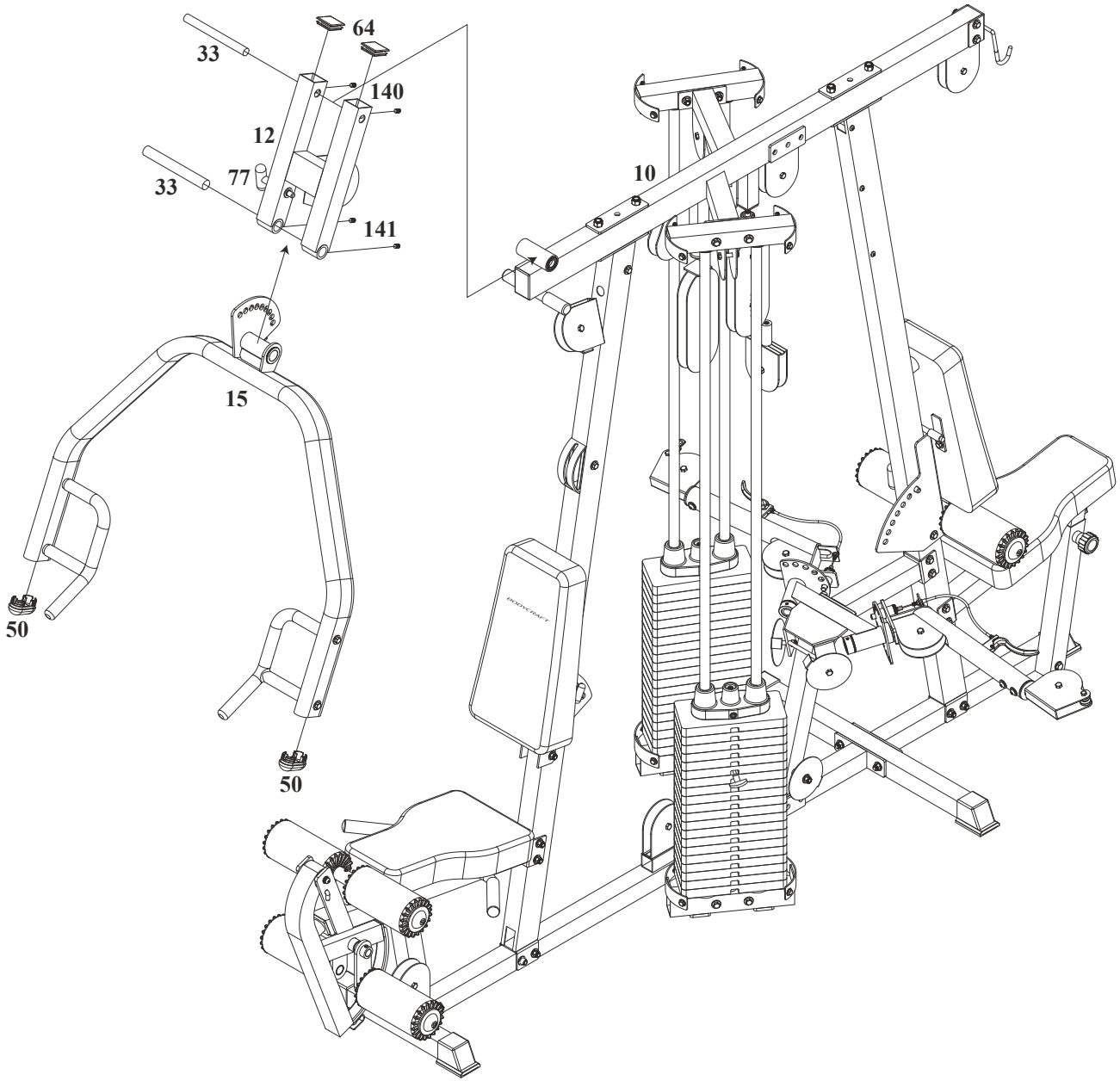

AB CRUNCH CABLE

REMOVABLE END AB CRUNCH CABLE (108)

1. Removable End of AB Crunch Cable should be screwed into completely after the AB Crunch Cable installment.
2. Catch the steel cable end to the bracket welded on Leg Extension Arm (20) as shown Fig 1, start to run the threaded end of the AB Crunch Cable (108) through and under two pulleys mounted on the Base Frame (1) as Fig 2 and Fig 3, up and over the lower pulley in Adjustable Pulley Block (30) as shown in Fig 4, then down the cable under and over the pulley welded on Base Frame (1) as show Fig 5, route the cable up and over to the pulley in the Front Upright (4), as shown Fig 6.
3. Re-screw the ball end cable to the AB Crunch Cable.

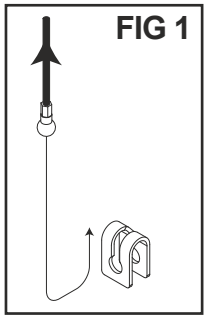

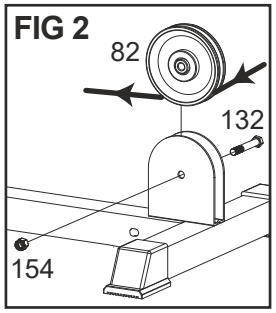

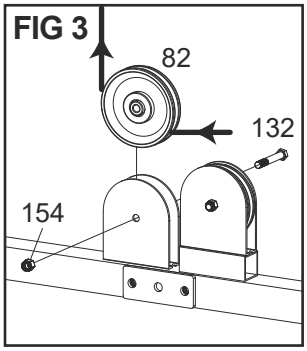

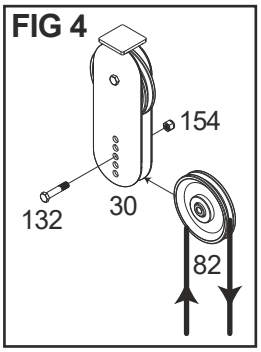

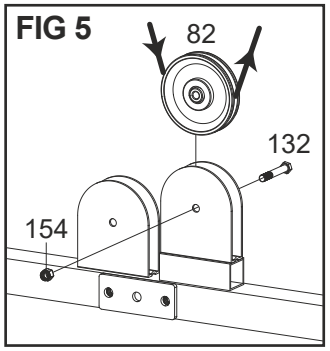

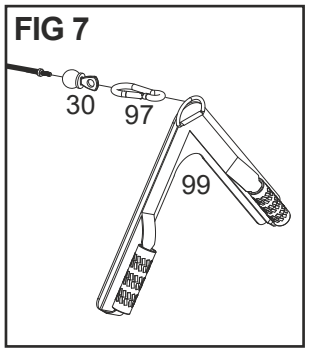

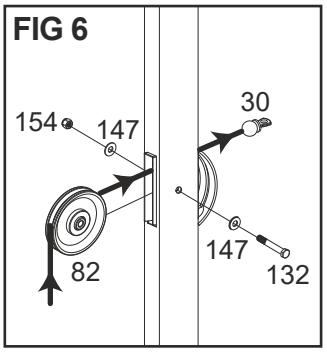

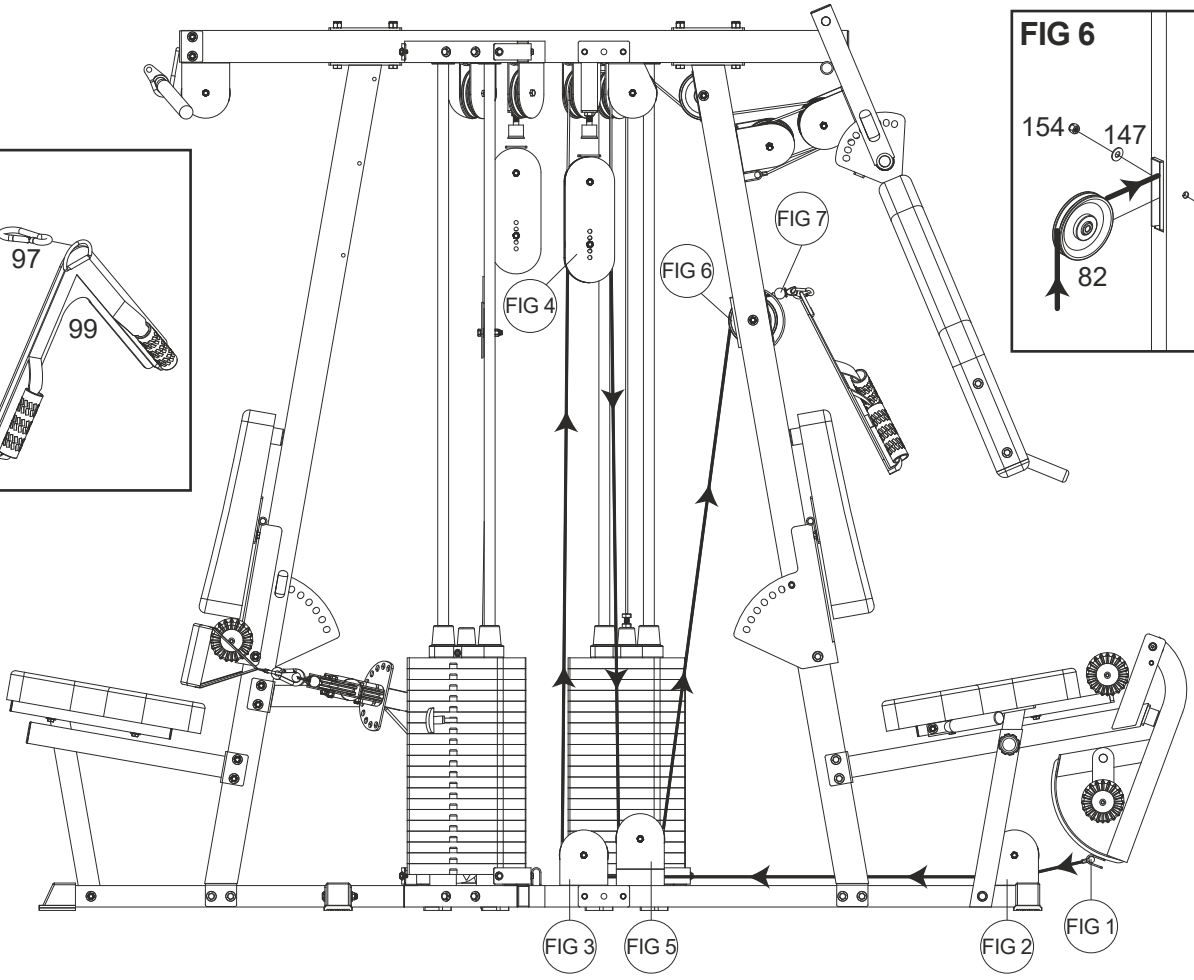

CABLE ARM CONNECTING CABLE

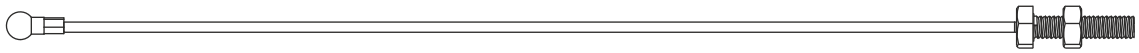

CABLE ARM CONNECTING CABLE (110)

Hook Cable Arm Connecting Cable (110) on bracket mounted on Base Frame (1) then route up and over low pulley in Adjustable Pulley Block (30) as shown in Fig. 3, then screw threaded cable end into Single Pulley Block (25).

FIG 1

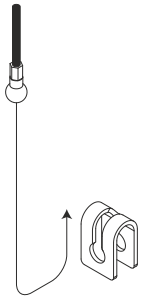

FIG 2

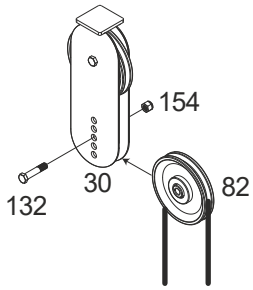

FIG 3

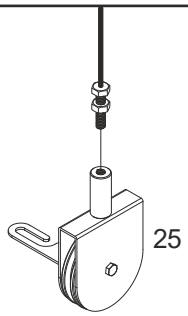

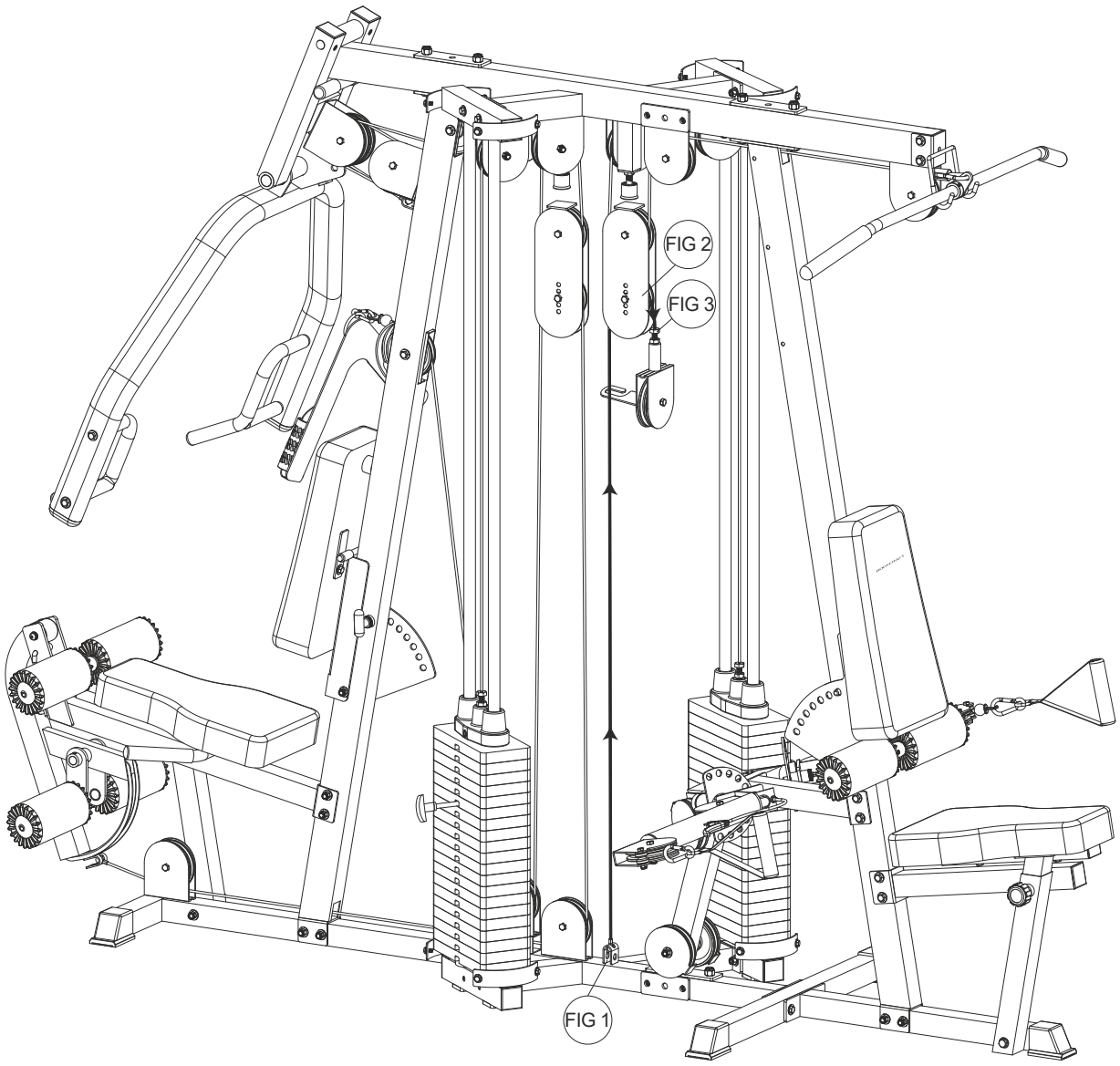

PRESS ARM CABLE

PRESS ARM CABLE (107)

Assemble Cables and Pulley simultaneously.

Attach steel ball end of the Press Cable (107) to the bracket mounted on Front Upright (4) as shown Fig. 1. Route cable over and around left (as if sitting on seat) side pulley mounted in Press Arm Selector (12), under and around pulley mounted in Front Upright (4), over and around right side pulley in Press Arm Selector (12) as shown Fig. 2. Continue through (uppermost) slot and over pulley in Front Upright (4) as shown in Fig. 3, under top pulley in Adjustable Pulley Block (30), up and over pulley mounted on Top Frame (10), as shown in Fig. 4, down and around top pulley in Adjustable Pulley Block (30), up and over pulley mounted in Top Guide Rod Retainer (6), and down to weight stack. Screw Press Cable (107) end into Selector Rod (94) at least 7 threads as shown in Fig. 8.

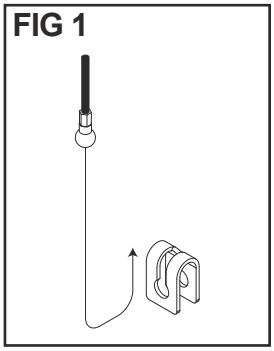

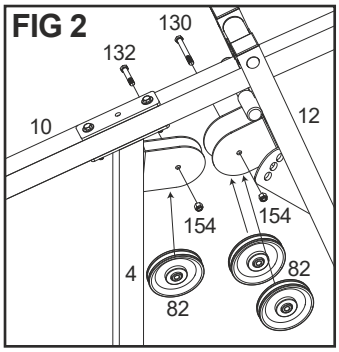

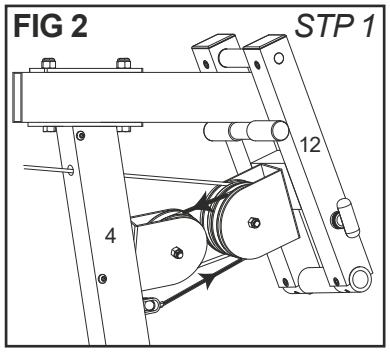

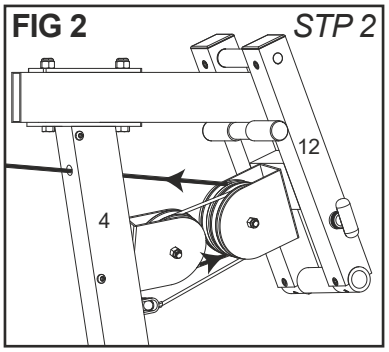

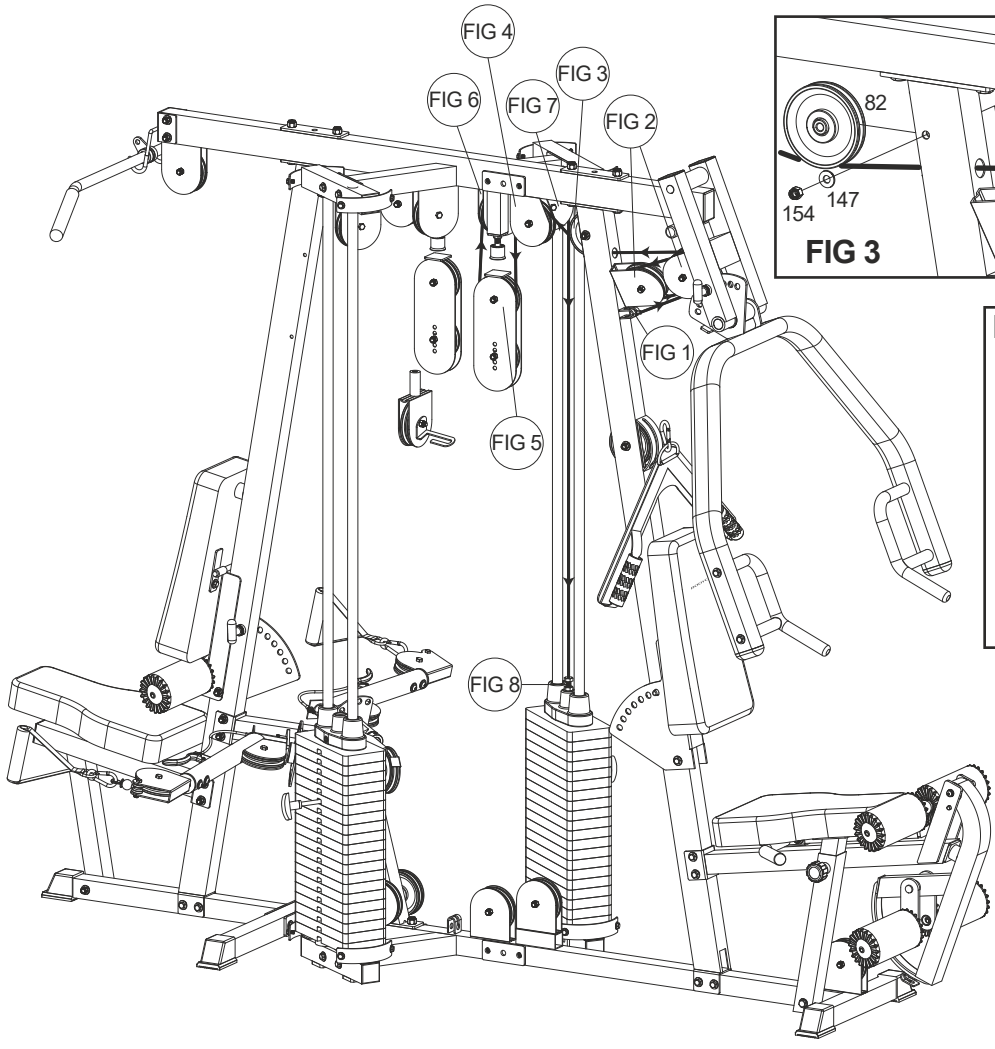

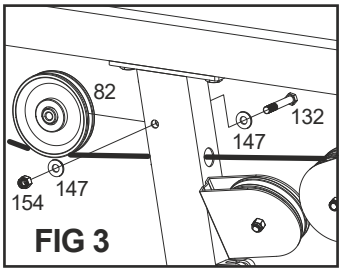

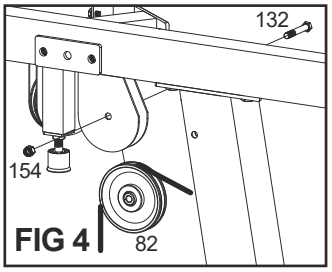

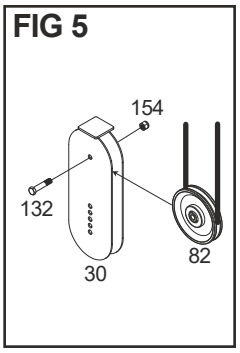

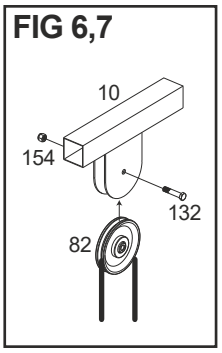

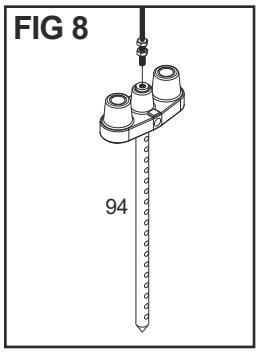

TOP CABLE

TOP CABLE (109)

Route threaded end of Top Cable (109) over pulley mounted to Top Frame (10) as shown in Fig. 1, through slot in Rear Upright (3), over pulley in Top Frame (10), under and around top pulley in Pulley Block (30), as shown in Fig. 3 up and over pulley mounted on Top Guide Rod Retainer (6), as shown in Fig.5, and down to weight stack. Screw cable end into Selector Rod (94) at least 7 threads as shown in Fig. 6.

FIG 1

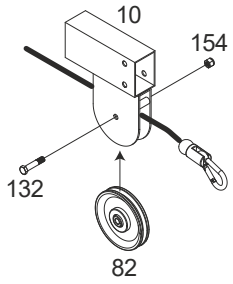

FIG 2,4,5

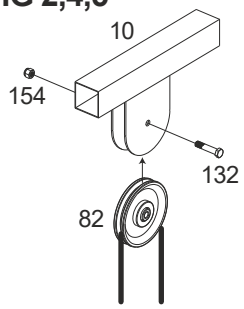

FIG 3

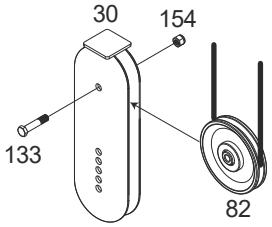

FIG 6

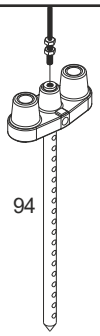

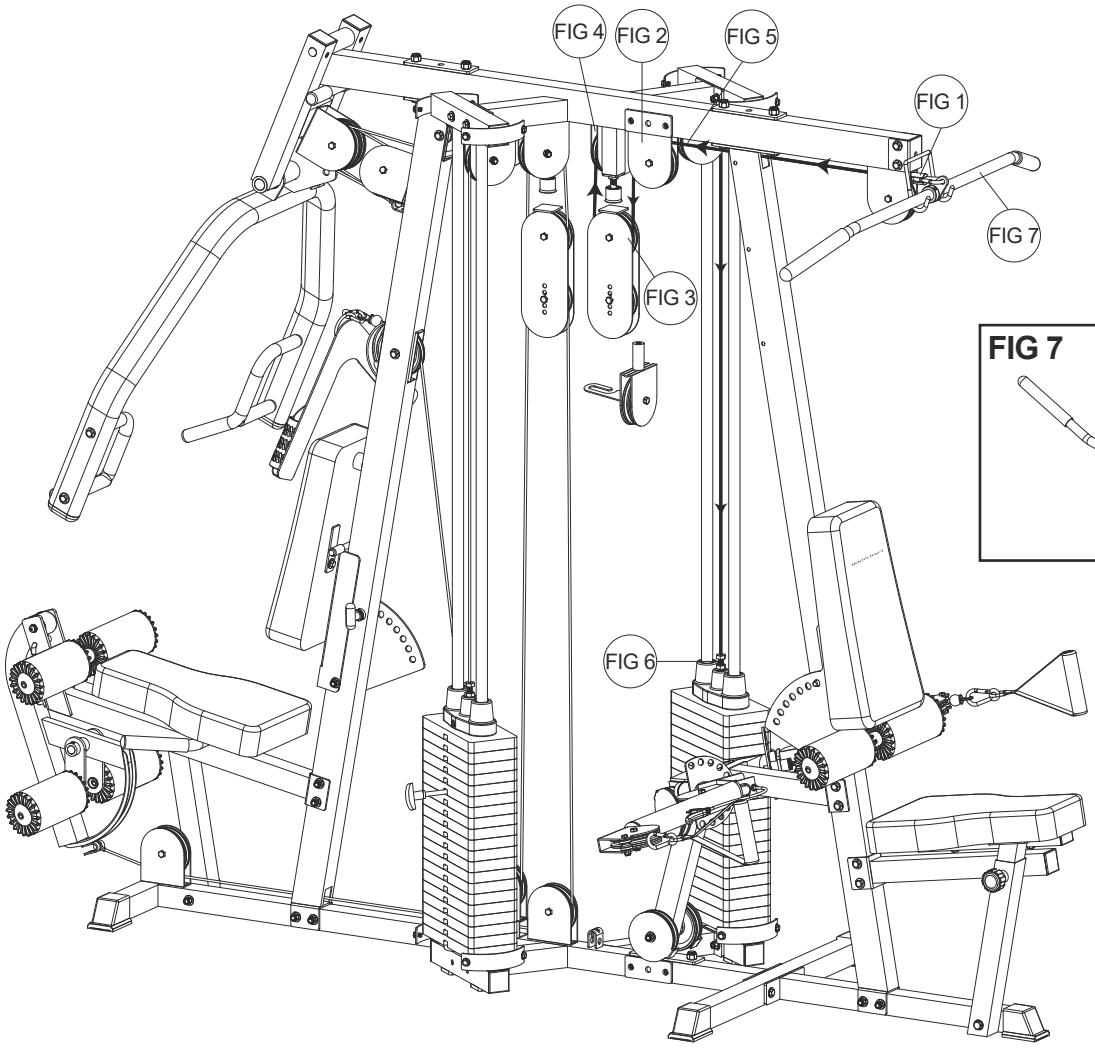

FIG 7

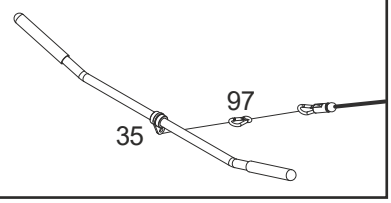

CABLE ARM CABLE

CABLE ARM CABLE (111)

Attach Cable Arm Cable (111) on the pulley of Single Pulley Block (25) as shown Fig. 5
Attach pulleys and Pulley Guide Brackets (26) to Cable Arm Assembly (27) as shown in Fig. 3 and Fig. 4. Be certain that, when tightened, the pulley guide brackets do not interfere with cable movement. Route Cable Arm Cable (111) around these pulleys as shown, up and around pulley in the Single Pulley Block (25).
Make sure Cable Guide Plate (171) attached on Single Pulley Block (25) to be guided at Connecting Cable (110).

FIG 2,8

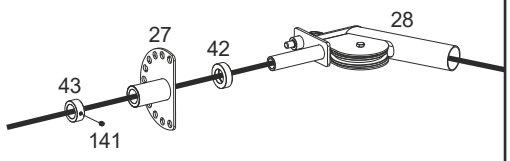

FIG 3,7

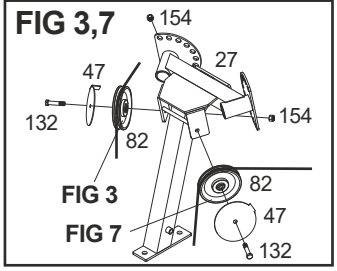

FIG 4,6

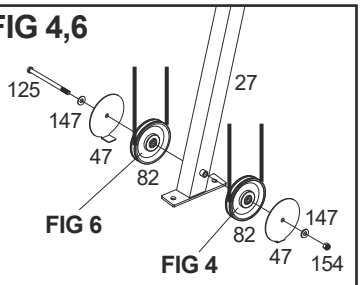

FIG 1,9

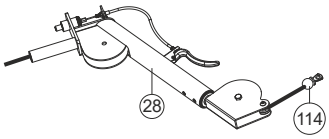

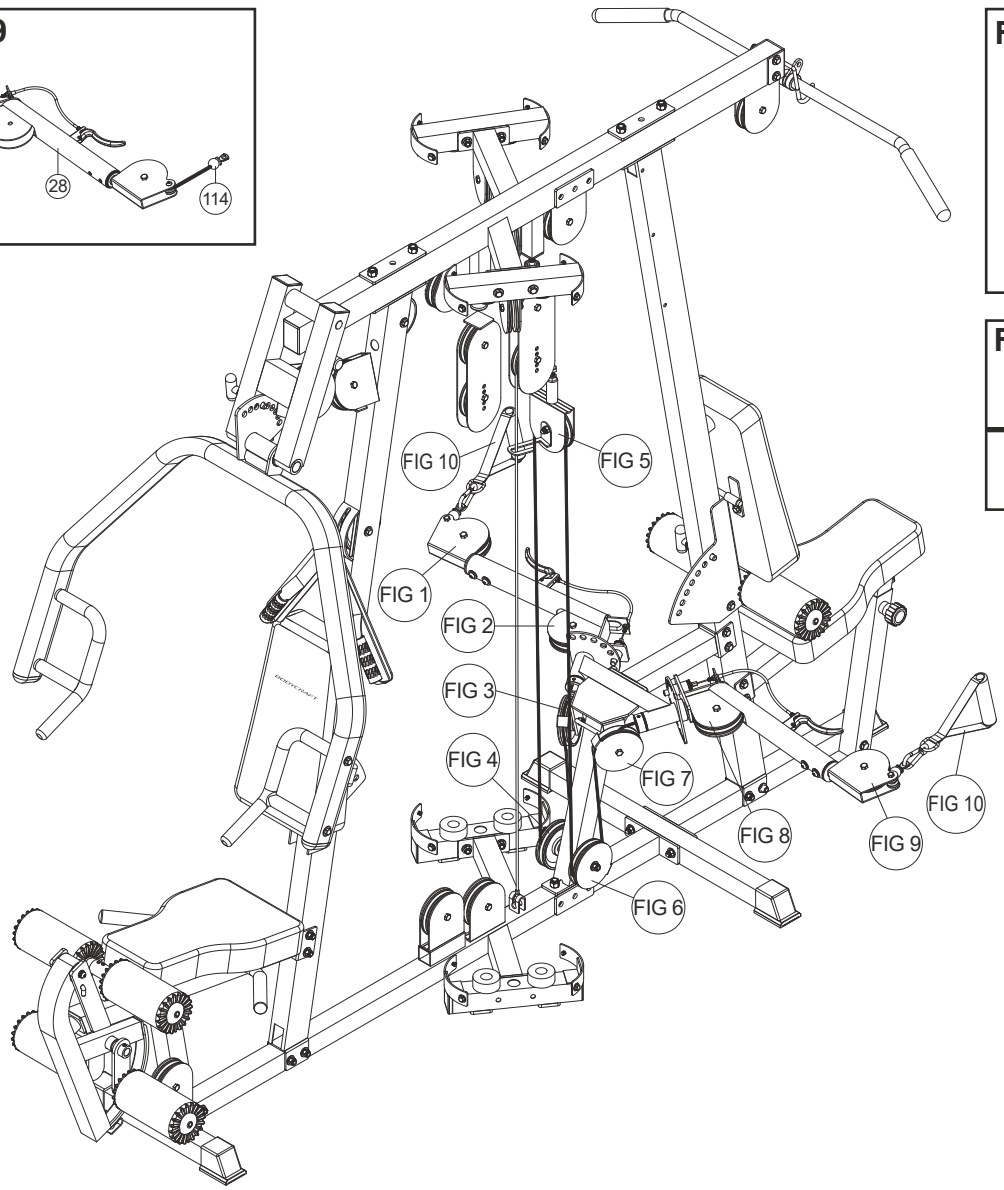

FIG 5

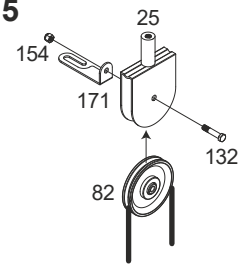

FIG 10

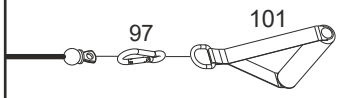

LEG PRESS SYSTEM ASSEMBLY

1. Attach Leg Press Weight Base Connector (207) to Base Frame (1), using two 1/2" X 1-1/4" Hex Bolts (169) and two 1/2" Washers (146). Cap two 50mm S.Q. Plugs (64) into Base Connector (207).
2. Attach Long Leg Press Connector (205) into the Weight Base (5), using two 3/8" Washers (147) and two 3/8" Nylon Nuts (154).
3. Attach Leg Press Main Frame (202) to Leg Press Weight Base Connector (207) and Long Leg Press Connector (205), using two 3/8" X 4-1/4" Hex Bolts (127), four 3/8" Washers (147) and two 3/8" Nylon Nuts (154).
4. Attach Base Stabilizer (201) to Leg Press Main Frame (202) using two 1/2" X 3-1/4" Hex Head Bolts (123) and two 1/2" Nylon Nuts (153). Attach 45 X 75mm Rect. Cap (61) to rear of Leg Press Main Frame (202) and two 50mm SQ. Caps (62) to Base Stabilizer (201).
5. Slide Axle on Rear Leg Press Support (209) into each Bearing Housing (70), then attach Bearing Housings (70) back onto Leg Press Main Frame (202), using four 1/2" X 1-3/4" Hex Bolts (124), eight 1/2" Washers (146) and four 1/2" Nylon Nuts (153). Attach Front Leg Press Support (206) to Leg Press Main Frame (202) using one 5/8" X 6-1/2" Hex Head Bolt (121), two 5/8" Washers (145) and one 5/8" Nylon Nut (152).
6. Attach Foot Plate Connector (210) to Rear Leg Press Support (209) and Front Leg Support (206) using one each 5/8" X 6-1/2" Hex Head Bolt (121), two 5/8" Washers (145) and one 5/8" Nylon Nut (152).
7. Attach Foot Plate (211) to Foot Plate Connector (210), using two 1/2" Washers (146) and two 1/2" Nylon Nuts (153). Attach 45 X 75mm Rect. Plugs (63) to Foot Plate (210). Attach Right & Left Leg Handles (203 & 204) to Leg Press Main Frame (202), angle facing up, using two 3/8" X 3-1/8" Hex Head Bolts (128), four 3/8" Washers (147) and two 3/8" Nylon Nuts (154). Attach Seat Pad (105) to Leg Press Main Frame (202), using two 3/8" Washers (147) and two 3/8" X 1" Hex Head Bolts (134), one 3/8" X 2-3/4" Hex Head Bolt (129). Attach Back Pad (104) to Back Pad Adjuster (212) using two 3/8" Washers (147) and two 3/8" X 1" Hex Bolts (134). Slide Back Pad Adjuster (212) into Leg Press Main Frame (202) by pulling pre-installed Locking Spring Knob (79).

Tighten all the bolts and nuts gradually, from ground - up.

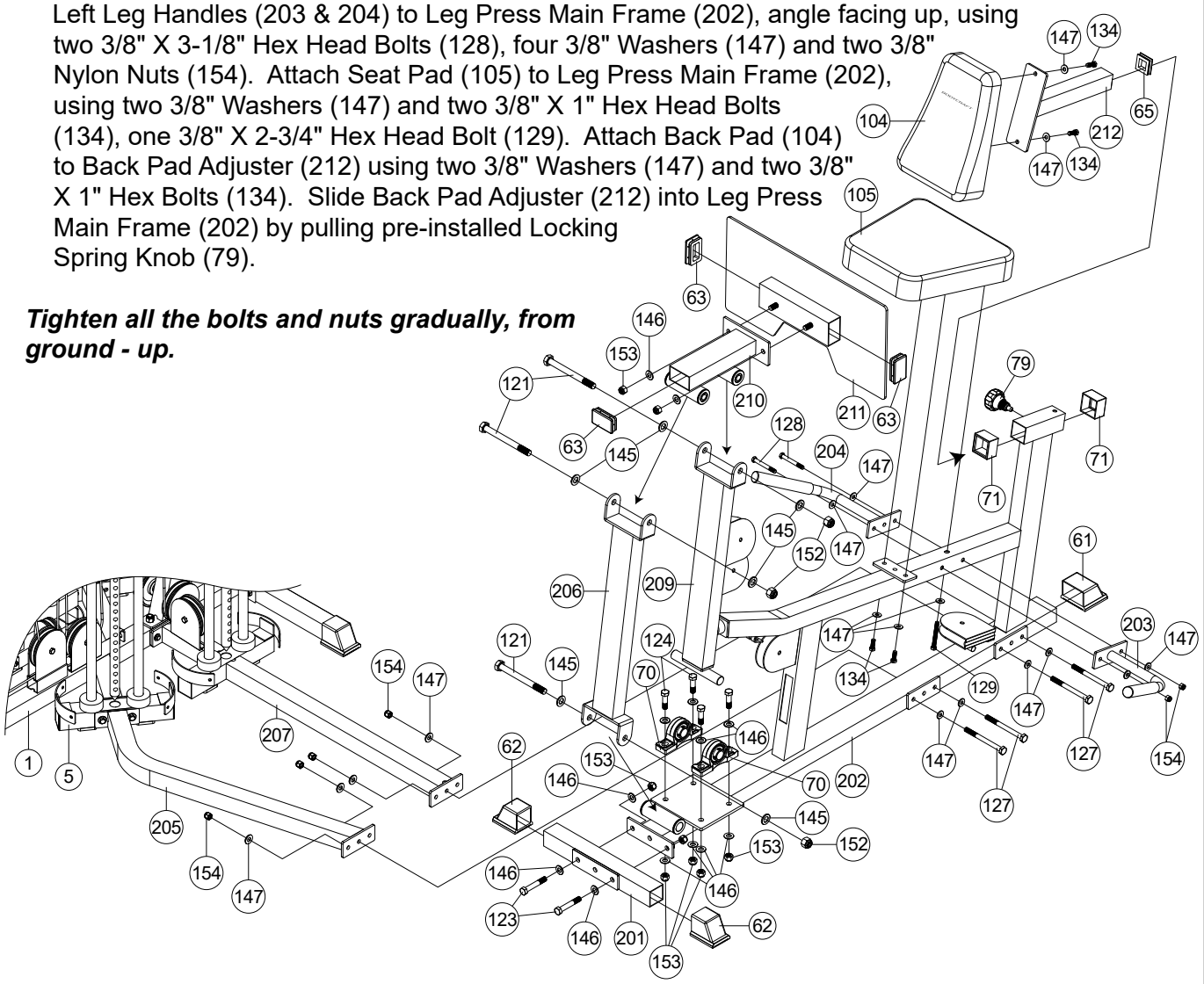

LEG PRESS CABLE ASSEMBLY

bolt end **LEG PRESS CABLE (213)** metal ball end

Screw threaded end of Leg Press Cable (213) into the top of Selector Rod (94) at least 7 threads. Route cable up and over the pulley on Top Guide Rod Retainer (208) as shown Fig 2. then down and under the pulley on Weight Stack Base (207) as shown in Fig. 3. Then route cable under Weight Stack Base (207) and around horizontal pulley on Leg Press Main Frame (202). Route cable under and around lowest pulley mounted on Rear Leg Press Support (209), under and around right side (as if sitting on seat) pulley on Leg Press Main Frame (202), over and around top pulley on Rear Leg Press Support (209), under and around left side pulley on Leg Press Main Frame (202) as shown in Fig. 6. Then hook the ball end of the cable into the receptor mounted on Rear Leg Press Main Frame (202) as shown in Fig. 8.

Hint : When viewed from the side, the Leg Press Cable should be a series of " loops".
There should not be any " X's "

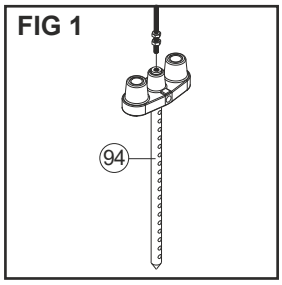

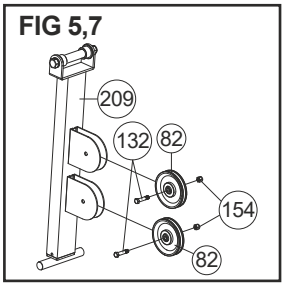

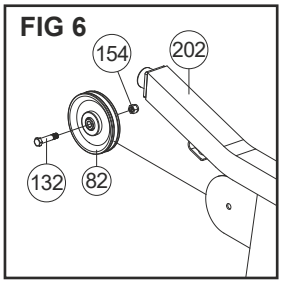

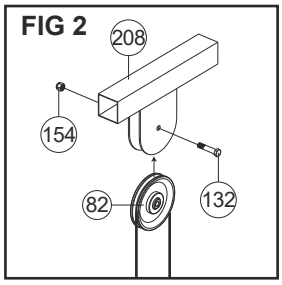

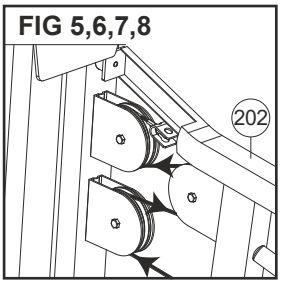

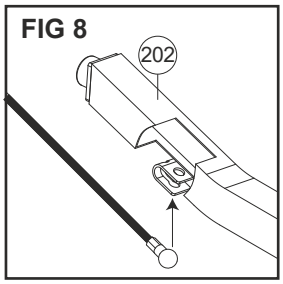

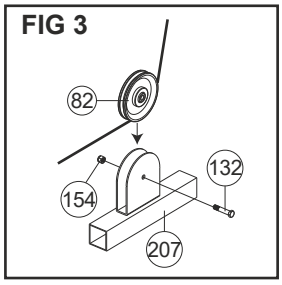

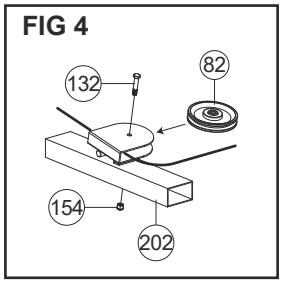

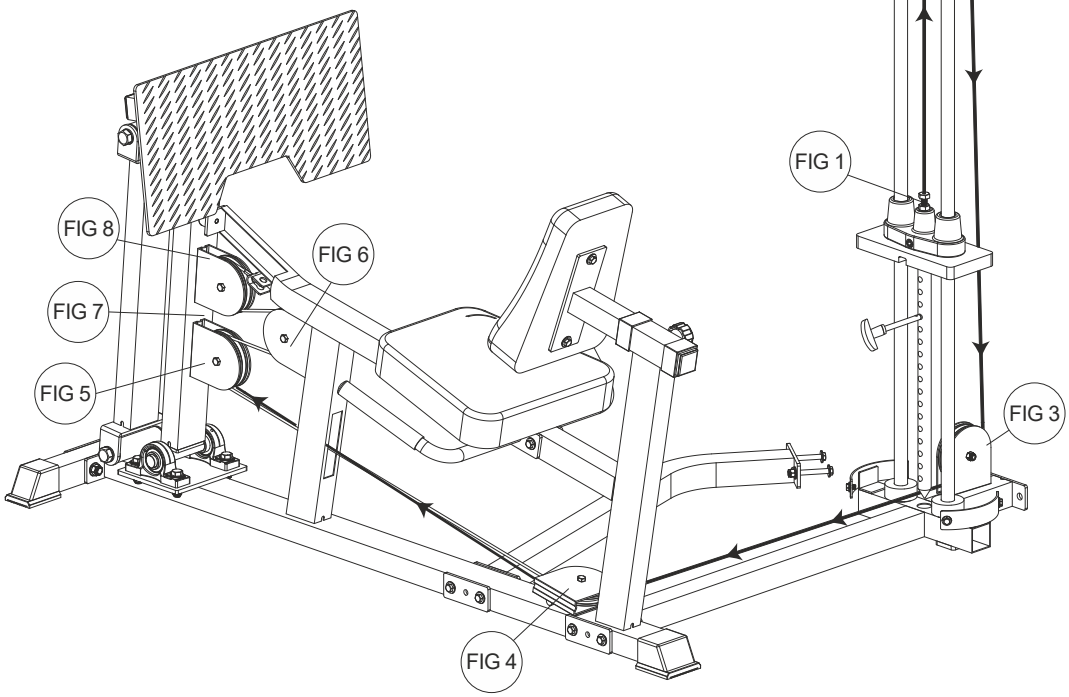

CABLE COLUMN BASE FRAME ASSEMBLY

1. Attach three 50mm SQ. Plugs (64) to Cable Column Weight Stack Base (301B). Attach Cable Column Weight Stack Base (301B) to Base Frame (1), using two 1/2" X 1-1/4" Hex Threaded Bolt (169) and two 1/2" Washers (146).
2. Attach Front Stabilizer (303B) to Weight Stack Base (301B), using two 3/8" X 3-1/2" Hex Bolts (318), four 3/8" Washers (147) and two 3/8" Nuts (154). Attach two 50 X 75mm Rect. Plugs (67) onto both ends of Front Stabilizer (303B).
3. Insert two Plastic Guide Rod Holders (72) into Weight Stack Base (301B). Slide two Rubber Donuts (84) onto one end of each Guide Rod (13), then insert Guide Rod (13) into the Plastic Guide Holders (72) in the Weight Stack Base (301B).
4. Slide each 10 LB Plate (96) over Guide Rod (13). Make certain that each plate is oriented with selector hole on bottom and facing forward. Attach Top Plate (95) to Selector Rod (94) using Top Plate Bolt (142). Slide Top Plate (95) and Selector Rod (94) over Guide Rods (13). Insert Plastic Guide Rod Holder (72) into Top Guide Rod Retainer (302), and then slide Top Guide Rod Retainer (302) over top of Guide Rods (13).
5. Attach Top Guide Rod Retainer (302) to Top Frame (10), using two 1/2" X 1-1/4" Hex Thread Bolt (169) and two 1/2" Washers (146).
6. Slide Cable Height Adjuster (304) onto Chromed Upright (306) and then insert the Hand Holder (307) into the top of Chromed Upright (306) as shown. Attach to Guide Rod Retainer (302), using two 3/8" X 3" Hex Bolts (128), four 3/8" Washers (147) and two 3/8" Nylon Nuts (154).

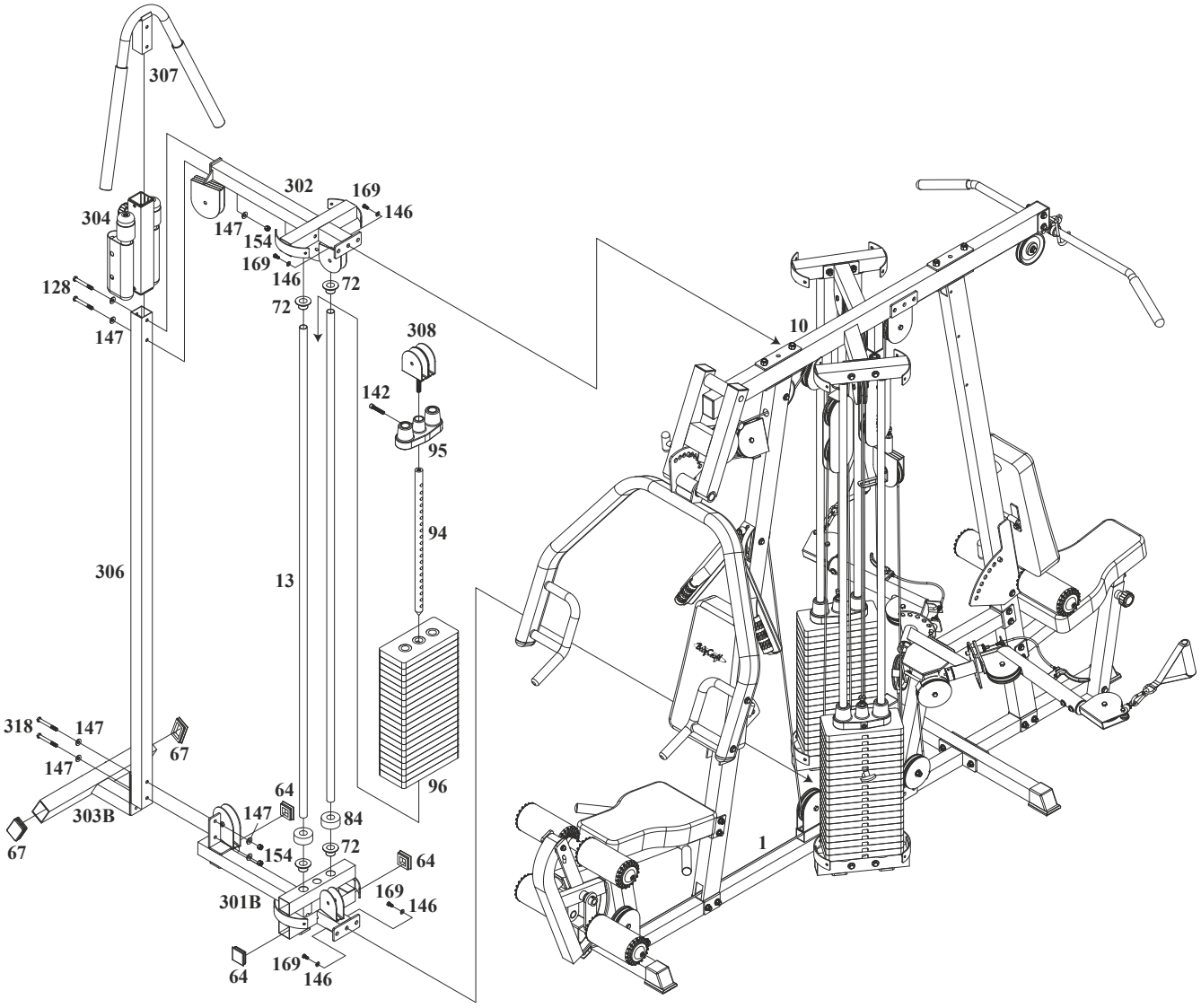

CABLE COLUMN CABLE

CABLE COLUMN CABLE (314)

REMOVABLE END (314A)

1. Screw the Double Pulley Bracket (308) into the Top Plate with Selector Rod (94) 10 threads (2cm).
2. Insert the ball end of the Cable Column Cable (314) into the front of the right side Cable Height Adjuster (304) and out of the top. Then attach two pulleys as shown in Fig 1. Route cable up to Top Guide Rod Retainer (302) and over pulley mounted as shown in Fig 2.
3. Coutinue along Top Guide Rod Retainer (302) to next pulley as shown in Fig 3. Then down to left side pulley in Double Pulley Bracket (308) as shown in Fig 4 [STEP1], up to rear side of next pulley in Top Guide Rod Retainer (302) {exiting toward front}. Then continue routing down to front of right side pulley in Double Pulley Bracket (308) {exiting toward rear}, then up to front of last pulley in Top Guide Rod Retainer (302) as shown in Fig 4 [STEP2].
4. Route cable over last pulley in top, exiting toward rear, continue down to pulley mounted behind Weight Stack Base (301B) as shown in Fig 7, under Weight Stack, and around pulley at base next to column. Finally, route cable up to left side of Cable Height Adjuster (304) and mount pulleys as shown in Fig 1. Attach removable end to the bolt end of the cable.

IMPORTANT: Cable length can be adjusted by removing the Bolt on the Top Plate (95) to turn the Selector Rod (94) to remove slack or further down to gain length.

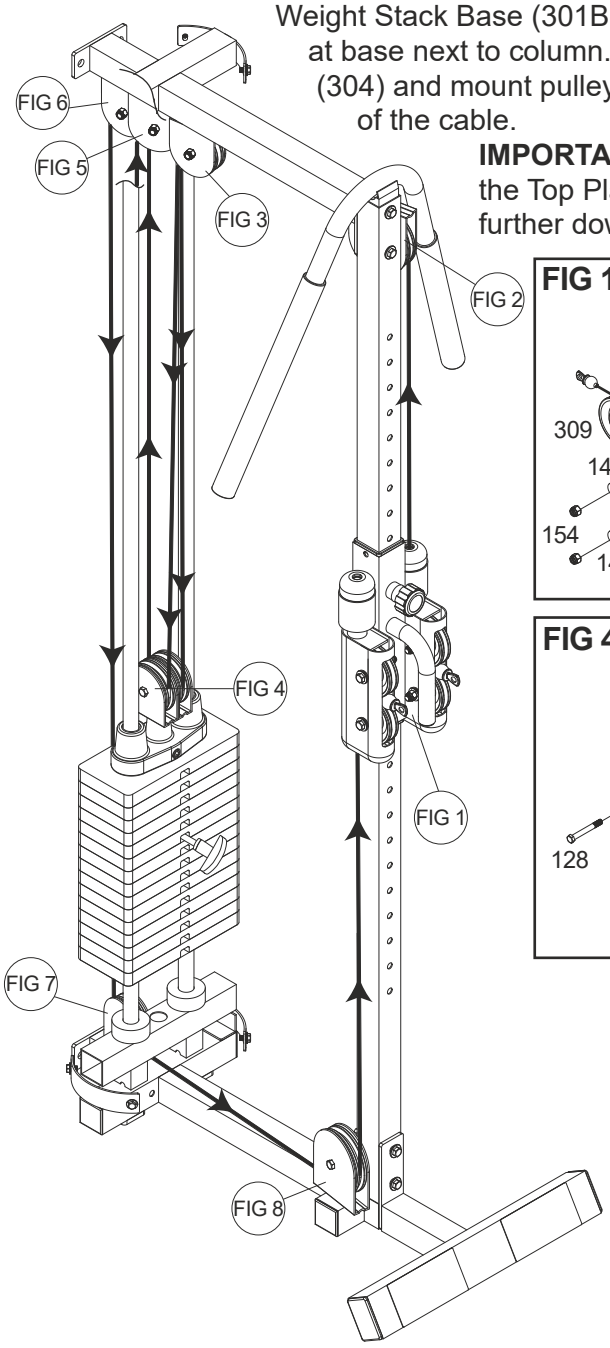

FIG 1

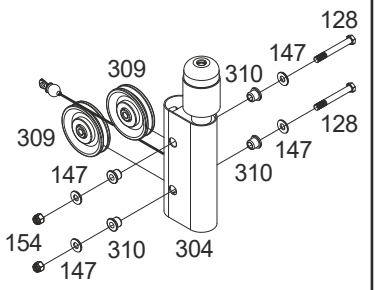

FIG 2

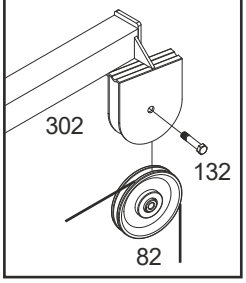

FIG 3,5,6

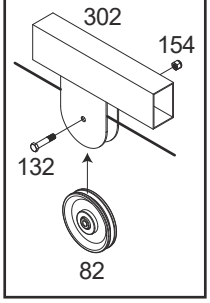

FIG 4

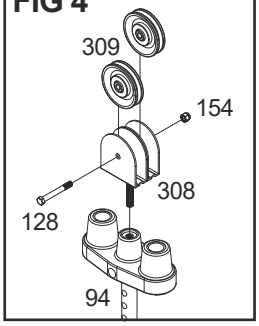

FIG 4 *STEP 1*

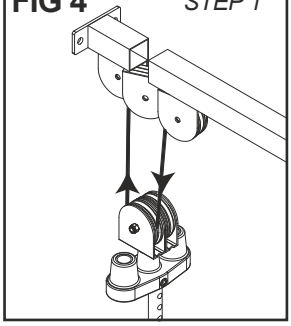

FIG 4 *STEP 2*

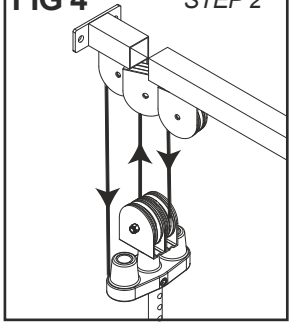

FIG 7,8

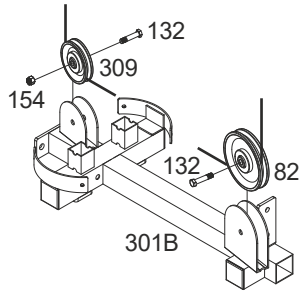

IMPORTANT

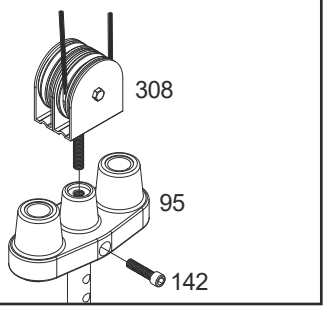

ASSEMBLE WEIGHT STACK SHROUDS AND POSTER PLATES

1. Attach Weight Stack Shrouds (35) to Weight Stack Bases (5 & 6) and Tops using 5/16" Washers (148) and 5/16" X 1/2" Hex Head Bolts (135). Remember to keep all bolts loose in frame to ensure holes line up easily.
2. Attach Right & Left Poster Plates (38R & 39L) to Rear & Front Uprights (3 & 4) using 8 X 53mm Female Bolts (143) and 6 X 12mm Male Nuts (144).
3. Trim two Trims for Weight Shroud (106) on Weight Stack Shroud (35).

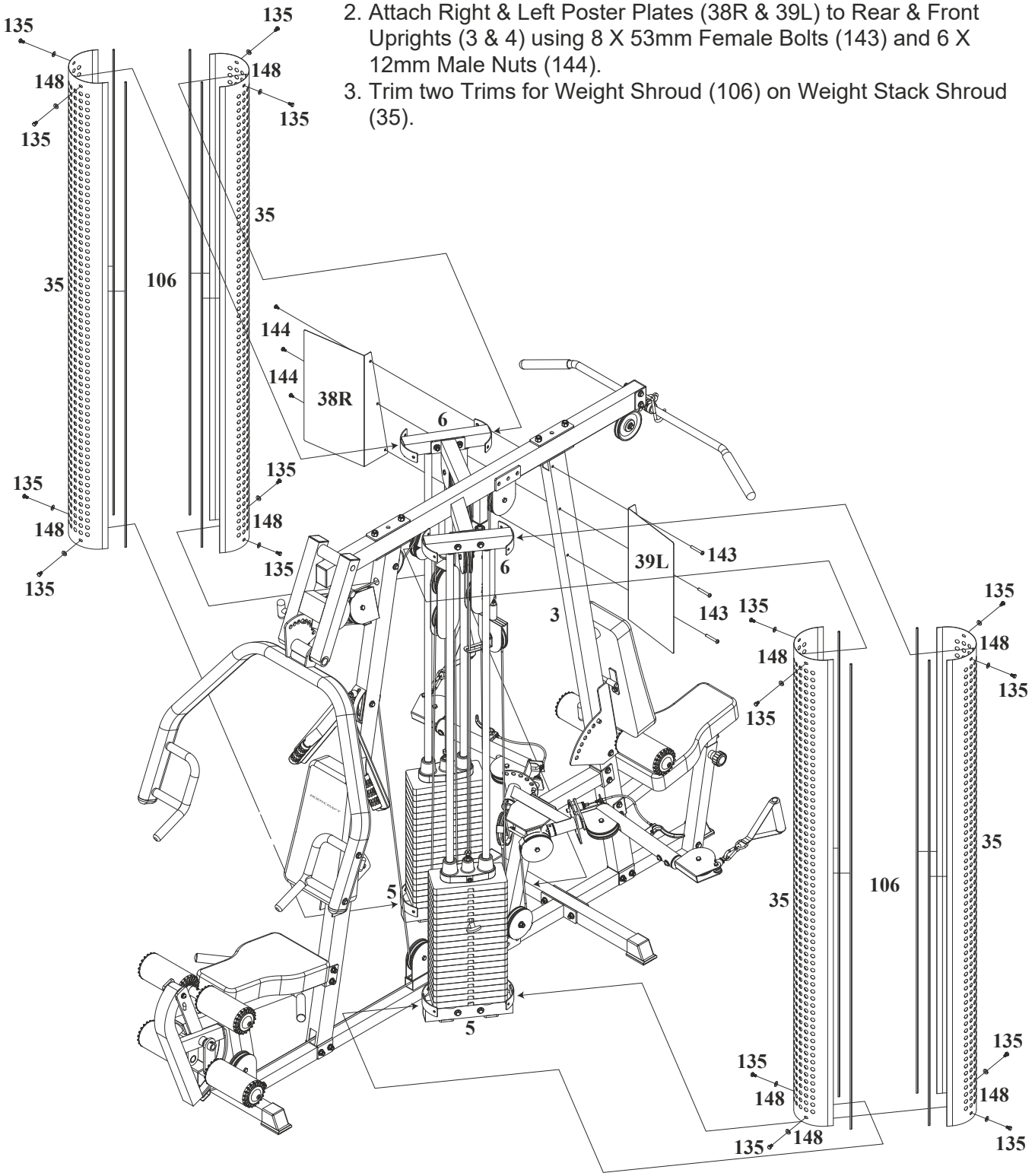

LEG PRESS SHROUD ASSEMBLY

1. Attach Weight Stack Shrouds (35) to Weight Base Connector (207) and Weight Stack Base (208) and Tops using 5/16" Washers (148) and 5/16" X 1/2" Hex Head Bolts (135). Remember to keep all bolts loose in frame to ensure holes line up easily.
2. Trim two Trims for Weight Shroud (106) on Weight Stack Shroud (35).

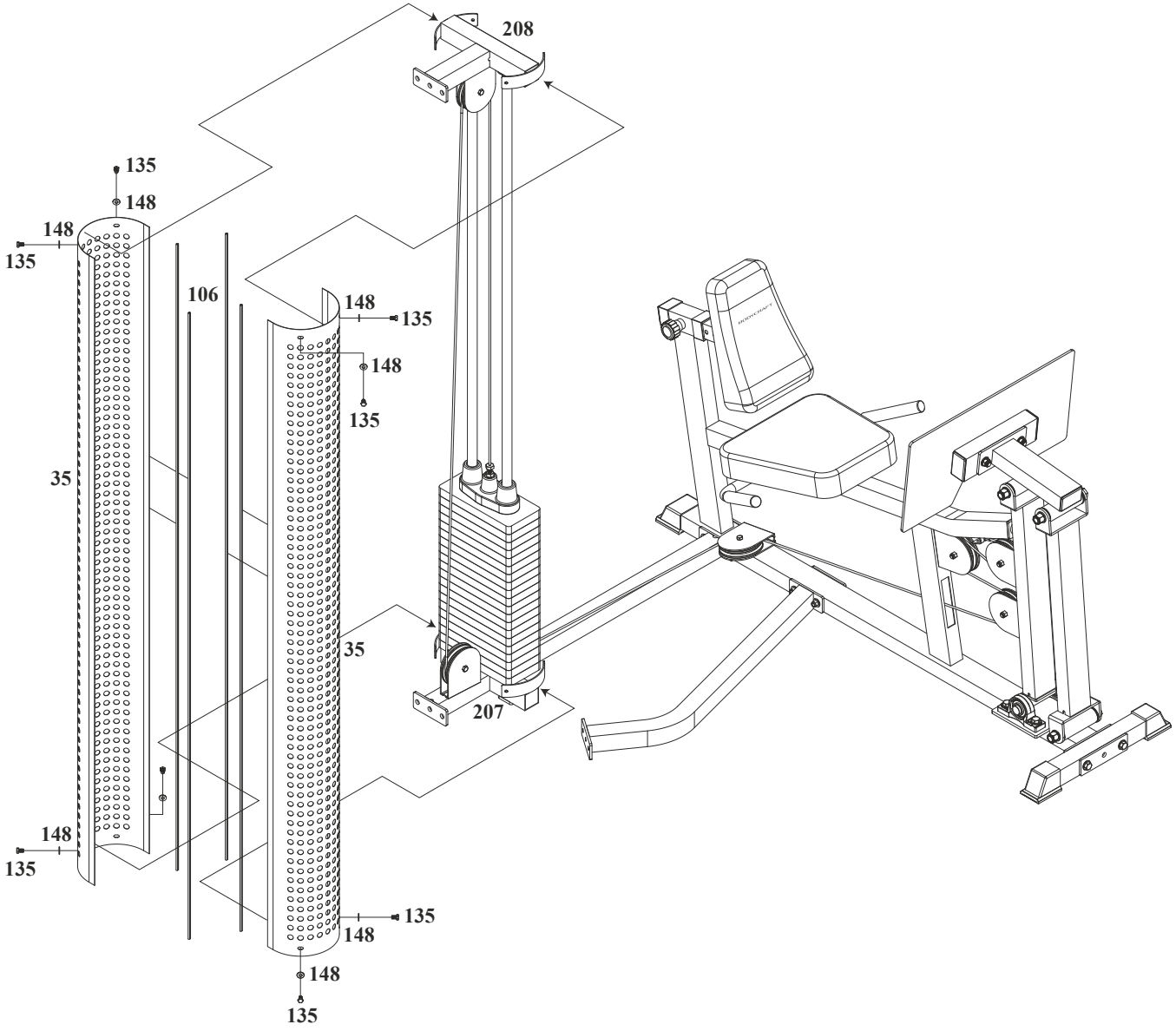

CABLE COLUMN WEIGHT STACK SHROUD ASSEMBLY

1. Attach Weight Stack Shrouds (35) to Top Guide Rod Retainer (302) and Weight Stack Base (301B) and Tops using 5/16" Washers (148) and 5/16" X 1/2" Hex Head Bolts (135). Remember to keep all bolts loose in frame to ensure holes line up easily.
2. Trim two Trims for Weight Shroud (106) on Weight Stack Shroud (35).

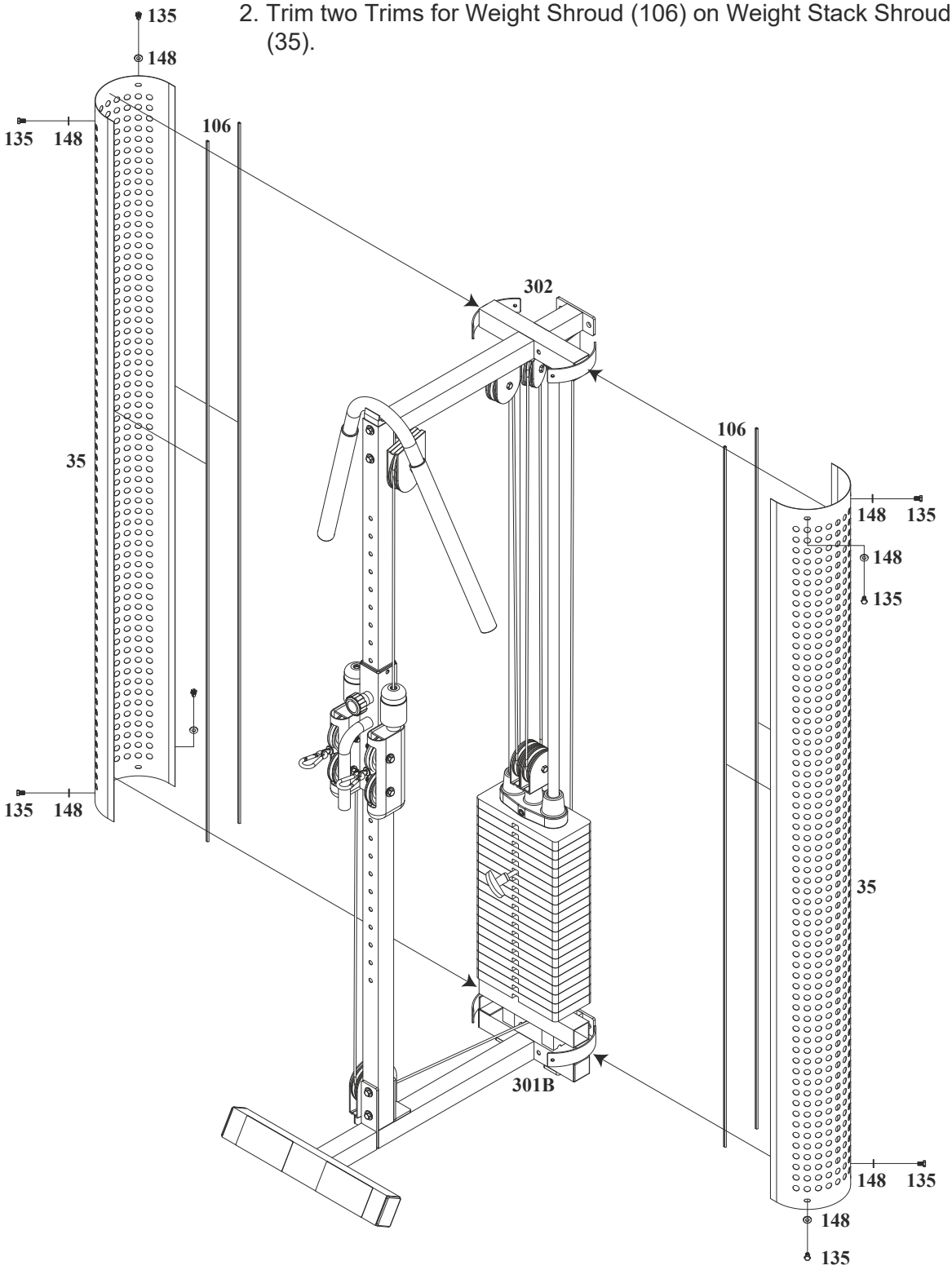

Assembly is complete! Please take the following steps before using the gym:

1. Make certain all bolts are tightened securely.
2. Make certain all cables are seated into all pulley grooves. A cable rubbing against steel will peel the nylon coating, voiding warranty and resulting in a need for replacement.
3. Pre-stretch the cables. Put the Magnetic Selector Pin (80) in the bottom hole on the weight stack. Pull on the cables with great force, helping remove any kinks and providing any initial cable stretch.
4. Be aware the cables can loosen and slightly stretch upon initial use.
5. The cables should be adjusted as tight as possible, but no so tight as to lift the Top Plate (95) above the weight stack. Be certain to secure the jam nuts after adjustments are made.
6. For better performance, apply a household lubricant (such as silicone) to any adjustable areas and to the Guide Rods (13).
7. Enjoy many years of a Fit Lifestyle.

Thank you for purchasing the LCS-4 Gym. If You have any questions, please call your local BodyCraft dealer or call our customer service department at 800-990-5556