BODYCRAFT

INSTRUCTION MANUAL
LEG PRESS (NEW MODEL)
OPTION OF K2 GYM

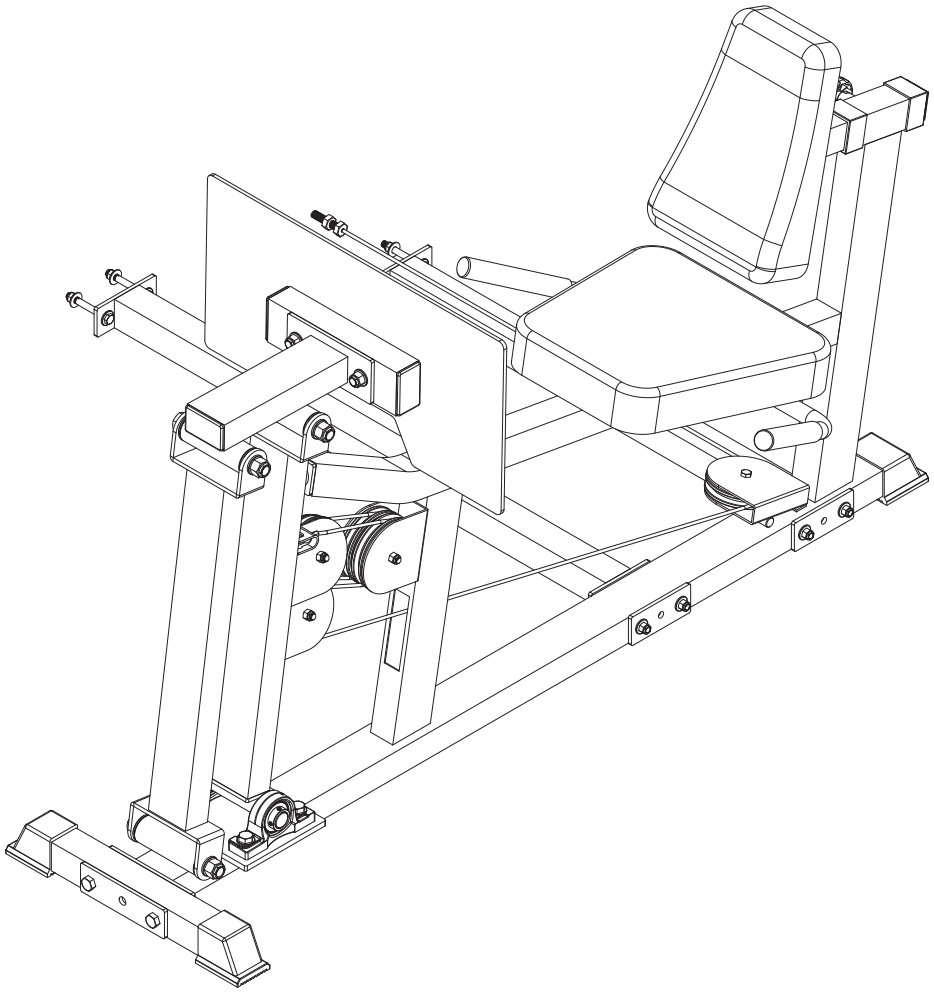

QUESTION?

As a quality home gym supplier we are committed to your complete satisfaction. If you have questions, or find missing or damaged parts, we will guarantee your complete satisfaction through our authorized dealer service centers or our home office customer service department. Please call your local dealer for assistance or BodyCraft at 800-990-5556 (9:00 AM - 5:00 PM). Our trained technicians will provide immediate assistance to you, free of charge.

Bodycraft is a division of Recreation Supply Inc.
P.O. BOX 181
Sunbury, OH 43074

740LP

BEFORE YOU BEGIN

Congratulations and thank you for selecting the **LEG PRESS OF K2 GYM** strength training system. The **LEG PRESS OF K2 GYM** offers an impressive array of strength training exercises to develop every major muscle group of the body. Whether your goal is cardiovascular fitness, a shapely, toned body or dramatic muscle size and strength, the **LEG PRESS OF K2 GYM** will help you achieve the specific results you want. For your safety and benefit, read this manual and the accompanying literature before using the **LEG PRESS OF K2 GYM**. Keep this manual for future reference. If you have additional questions, please call your local dealer or our customer service department at 800-990-5556 Monday through Friday, 9 a.m. until 5 p.m. Eastern Time.

IMPORTANT SAFETY NOTES

There is a risk assumed by individuals who use this type of equipment. Before beginning this or any other exercise program consult your physician. This is especially important for individuals over the age of 35 or persons with pre-existing health problems. Recreation Supply, Inc. assumes no responsibility for personal injury or property damage sustained by or through use of this product.

1. This product must be assembled on a flat, level surface to assure its proper function.
2. Clean pads and frame on a regular basis. We recommend warm, soapy water. Do not use harsh or abrasive chemicals.
3. Inspect and tighten all parts before every use. Replace any worn parts immediately. Failure to do so may result in serious injury.
4. Keep children away from the **LEG PRESS OF K2 GYM** at all times.
5. Keep your hands away from cables and pulleys during operation. Keep your hands away from moving parts other than the designated handles.
6. When adjusting the seat, make sure the spring pin is fully engaged. If not, the seat may slip and cause serious injury.
7. Make certain all cables are seated within the pulleys before every use.
8. Exercise with care to avoid injury.
9. If unsure about the proper use of the **LEG PRESS OF K2 GYM** strength training system call your local dealer or our customer service department at 800-990-5556.

EXPLODED VIEW

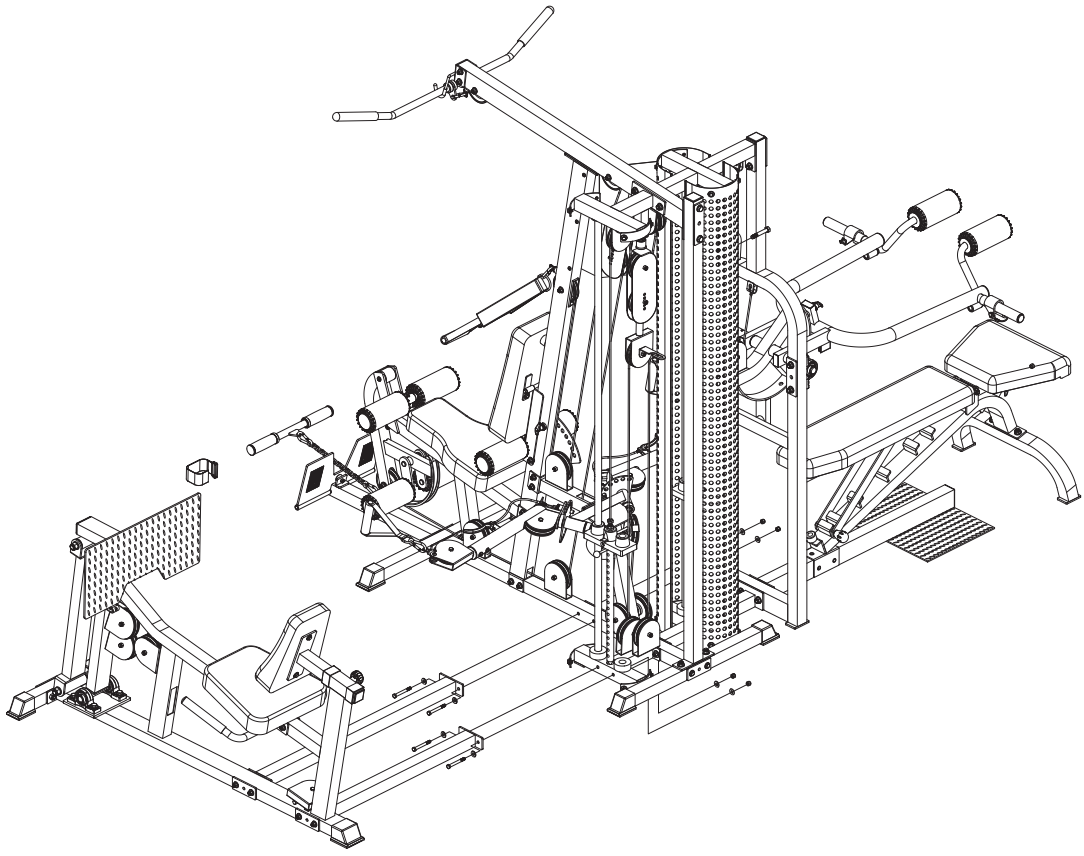

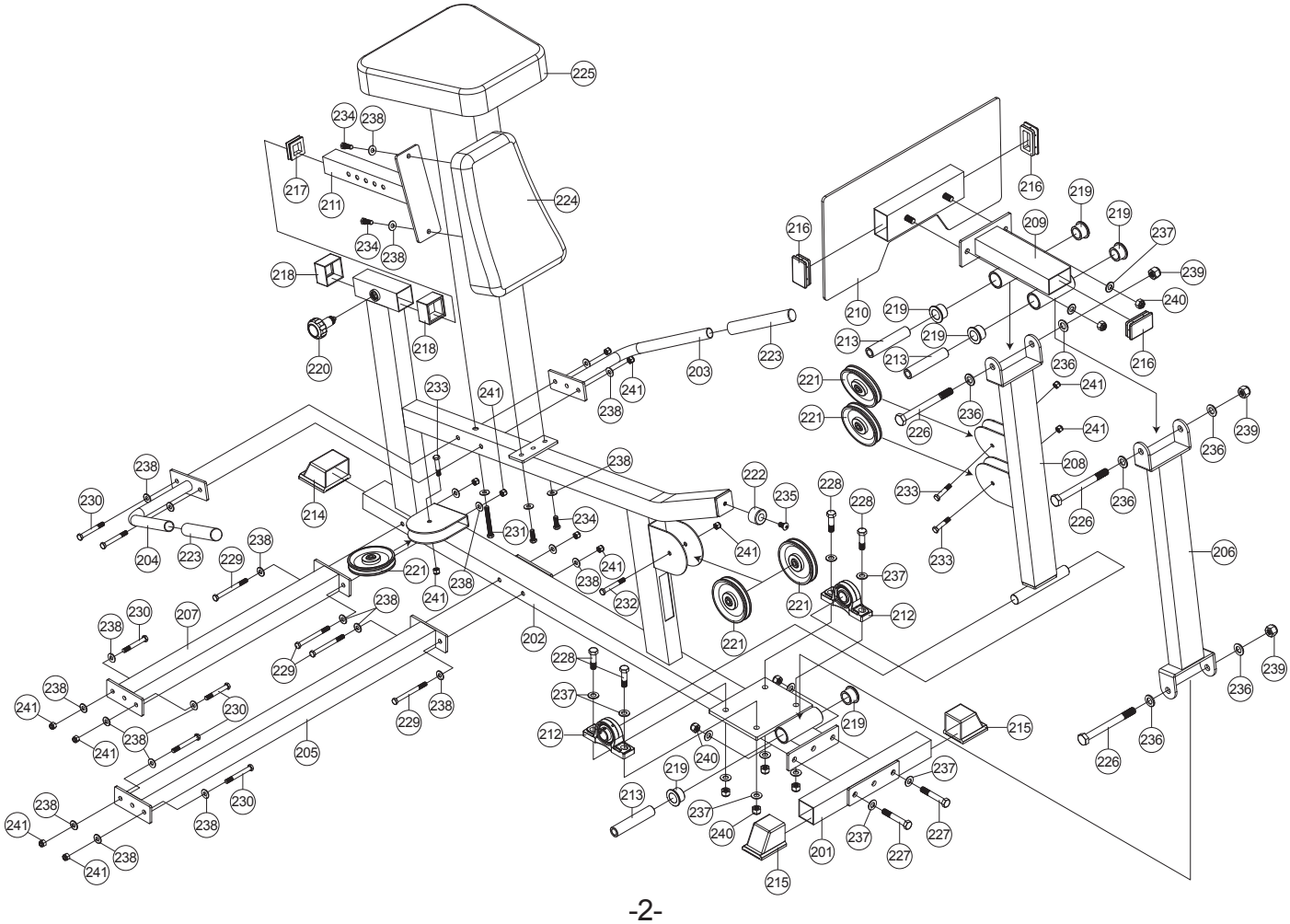

PARTS CHART

NO.	DESCRIPTION	QTY.
201	BASE STABILIZER	1
202	LEG PRESS MAIN FRAME	1
203	LEFT LEG PRESS HANDLE	1
204	RIGHT LEG PRESS HANDLE	1
205	LONG LEG PRESS CONNECTOR (1007mm)	1
206	FRONT LEG PRESS SUPPORT	1
207	WEIGHT BASE CONNECTOR (779mm)	1
208	REAR LEG PRESS SUPPORT	1
209	FOOT PLATE CONNECTOR	1
210	FOOT PLATE	1
211	BACK PAD ADJUSTER	1
212	BEARING HOUSING(all pre-assembled)	2
213	LEG PRESS AXLE	3
214	45mm X 75mm RECT. CAP	1
215	50mm SQ. CAP	2
216	45mm X 75mm RECT. PLUG	3
217	45mm SQ. PLUG	1
218	SPACER	2
219	25.4mm STEEL BUSHING(all pre-assembled)	6
220	LOCKING SPRING KNOB	1
221	PULLEY	5
222	LEG PRESS STOPPER	1
223	1" X 200mm HAND GRIP(all pre-assembled)	2
224	BACK PAD FOR LEG PRESS	1
225	SEAT PAD FOR LEG PRESS	1
226	5/8" X 6-1/2" HEX BOLT	3
227	1/2" X 3-1/4" HEX BOLT	2
228	1/2" X 1-3/4" HEX BOLT	4
229	3/8" X 4" HEX BOLT	4
230	3/8" X 3-1/8" HEX BOLT	6
231	3/8" X 2-3/4" HEX THREADED BOLT	1
232	3/8" X 2-3/4" HEX BOLT	1
233	3/8" X 1-3/4" HEX BOLT	3
234	3/8" X 1" HEX THREADED BOLT	4
235	3/8" X 5/8" SET SCREW(all pre-assembled)	1
236	5/8" WASHER	6
237	1/2" WASHER	14
238	3/8" WASHER	25
239	5/8" NYLON NUT	3
240	1/2" NYLON NUT	8
241	3/8" NYLON NUT	14
243	LEG PRESS CABLE	1

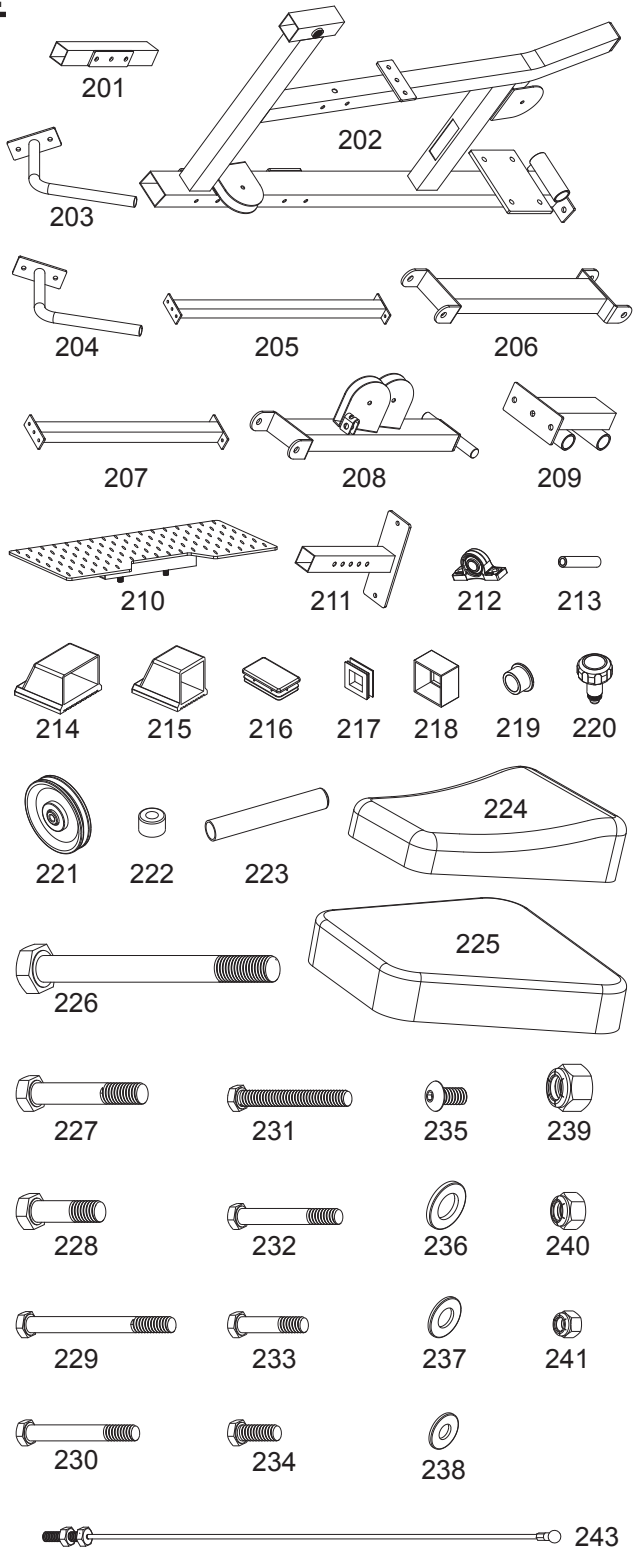

STEP 1

1. Attach the Long Leg Press Connector (205) to the Base Frame (1) of K2 gym, using two 3/8" X 3-1/8" Hex Bolts (230), four 3/8" Washers (238) and two 3/8" Nuts (241). Attach the Weight Base Connector (207) to the Gym Weight Base (18) of K2 gym, using two 3/8" X 3-1/8" Hex Bolts (230), four 3/8" Washers (238) and two 3/8" Nuts (241).

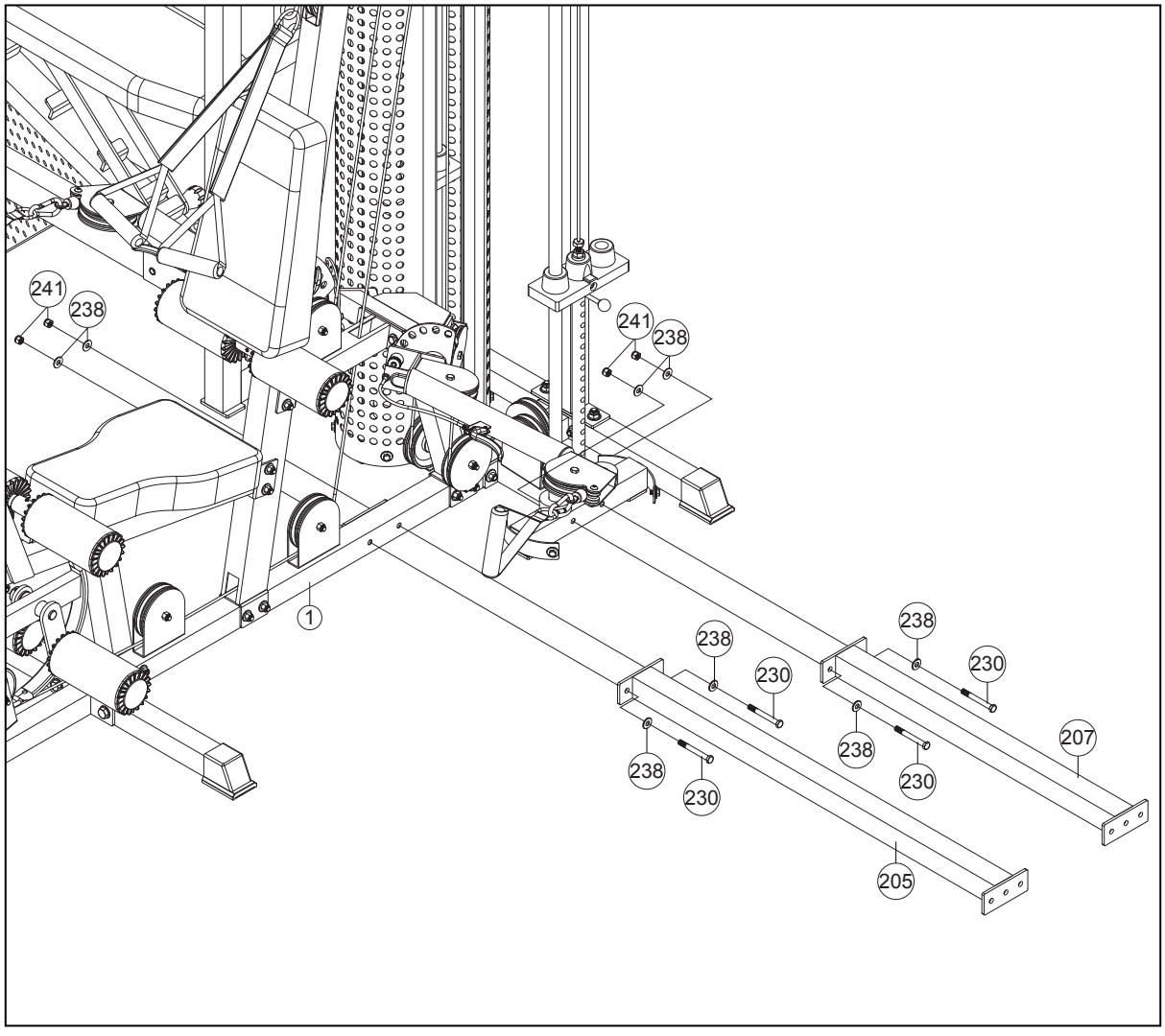

STEP 2

1. Attach the Leg Press Main Frame (202) to the Weight Base Connector (207) and the Long Leg Press Connector (205) using four 3/8" X 4" Hex Bolts (229), eight 3/8" Washers (238) and four 3/8" Nuts (241).
2. Attach the Base Stabilizer (201) to the Leg Press Main Frame (202), using two 1/2" X 3-1/4" Hex Bolts (227), four 1/2" Washers (237) and two 1/2" Nuts (240). Attach a 45mm X 75mm Rect. Cap (214) to the bottom rear of the leg Press Main Frame (202). Attach a 50mm Sq. Cap (215) to each end of the Base Stabilizer (201).
3. Slide a Bearing Housing (212) onto each end of the welded axle on the Rear Leg Press Support (208) and then bolt the Bearing Housings (212) to the Leg Press Main Frame (202) using four 1/2" X 1-3/4" Hex Bolts (228), eight 1/2" Washers (237) and two 1/2" Nuts (240).
4. Attach the Front Leg Press Support (206) to the Leg Press Main Frame (202) using one 5/8" X 6-1/2" Hex Bolt (226), two 5/8" Washers (236), and one 5/8" Nut (239).
5. Attach the Foot Plate Connector (209) to the Rear Leg Press Support (208) and the Front Leg Press Support (206) using one 5/8" X 6-1/2" Hex Bolt (226), one 5/8" Washer (236), and one 5/8" Nut (239) in each Leg Press Support.
6. Attach the Foot Plate (210) to the Foot Plate Connector (209), using two 1/2" Washers (237) and two 1/2" Nuts (240). Attach a 45mm X 75mm Rect. Plug (216) to the Foot Plate (210).
7. Attach the Right and Left Leg Press Handles (203 & 204) to the Leg Press Main Frame (202), angle facing up, using two 3/8" X 3-1/8" Hex Bolts (230), four 3/8" Washers (238) and two 3/8" Nuts (241). **Tighten nuts.**
8. Attach the Seat Pad for Leg Press (225) to the Leg Press Main Frame (202) using two 3/8" X 1" Hex Bolts (234), one 3/8" X 2-3/4" Hex Bolt (231) and three 3/8" Washers (238). Attach the Back Pad for Leg Press (224) to the Back Pad Adjuster (211) using two 3/8" Washers (238) and two 3/8" X 1" Hex Bolts (234). Screw the Locking Spring Knob (220) into the Leg Press Main Frame (202) and slide the Back Pad Adjuster (211) into the Main Frame (202). Adjust to the desired position by pulling the Locking Spring Knob (220).

Tighten all bolts gradually, from ground up.

STEP 2

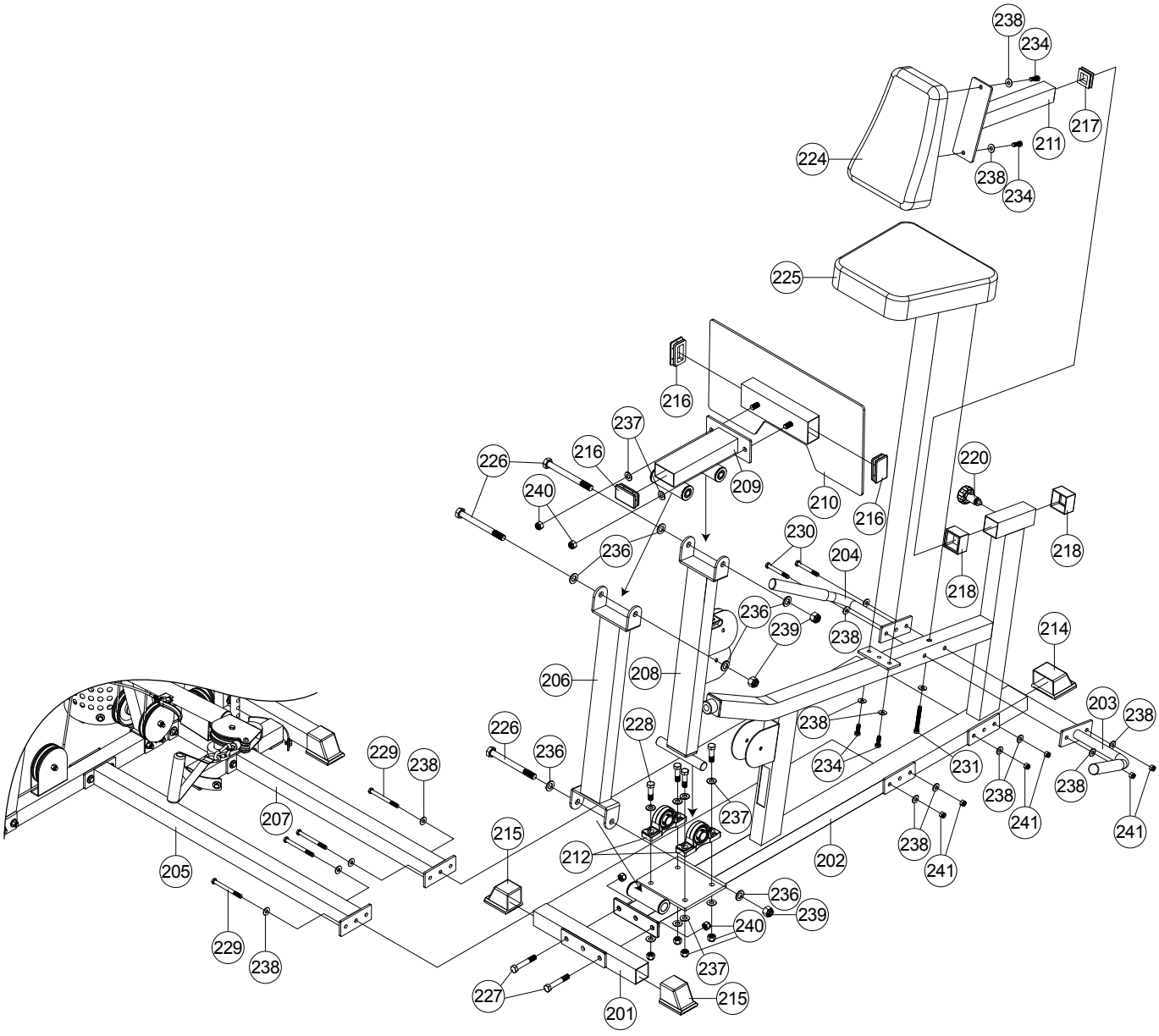
238
234
217
211
224
238
234
225
216
237
216
226
209
210
216
220
240
230
218
236
204
218
236
239
238
214
206
208
203
238
226
228
238
229
236
234
231
238
238
207
237
241
241
215
212
202
238
241
205
236
239
240
229
238
237
227
215
201

STEP 3

bolt end

LEG PRESS CABLE (243)

metal ball end

1. Screw the threaded end (approximately half way) of the Leg Press Cable (243) into the Single Pulley Block (27) as shown in Fig. 1.
2. Route the cable up and over the right side pulley in the Top Frame (5) as shown in Fig. 2. Mount the pulley using one 3/8" X 2-3/4" Hex Bolt (89) and one 3/8" Nylon Nut (107).
3. Continue to route the cable down to the pulley on the Base Frame (1) as shown in Fig. 3. Mount the pulley using one 3/8" X 1-3/4" Bolt (91) and one 3/8" Nut (107).
4. Then route the cable up to the lower pulley in the Adjustable Pulley Block (25) as shown in figure 4. Attach the pulley to the second hole from bottom. The multiple holes are for cable adjustment. When cabling is complete, this pulley can be moved upward to take up slack, or downward to gain length.
5. Continue to route the cable down to the pulley on the Base Frame (1) just behind the weight stack, as shown in Fig. 5. Mount the pulley using one 3/8" X 1-3/4" Bolt (91) and one 3/8" Nut (107).
6. Continue to route the cable underneath the weight stack and around the horizontally mounted pulley on the Leg Press Main Frame (202). Mount the pulley using one 3/8" X 1-3/4" Bolt (233) and one 3/8" Nut (241) as shown in Fig. 6.
7. Continue to route the cable through the slot in Leg Press Main Frame (202), and under and around (exiting on the top) the lowest pulley on the Rear Leg Press Support (208) as shown in Fig. 7, Step 1. Mount the pulley using one 3/8" X 1-3/4" Bolt (233) and one 3/8" Nut (241).
8. Then route the cable under and around (exiting on the top) the right side (as if sitting on seat) pulley mounted in Leg Press Main Frame (202) as shown in Fig 7. Mount two pulleys here using one 3/8" X 2-3/4" Hex Bolt (232) and one 3/8" Nylon Nuts (241).
9. Route the cable in the same manner under and around the uppermost pulley mounted on the Rear Leg Press Support (208) as shown in Fig. 7, Step 2. Mount the pulley using one 3/8" X 1-3/4" Bolt (233) and one 3/8" Nut (241).
10. Route the cable in the same manner under and around the left side (as if sitting on seat) pulley mounted in Leg Press Main Frame (202) as shown in Fig 7.
11. Hook the ball end of the cable into the receptor on the Rear Leg Press Support (208) as shown in Fig. 8.

Hint: When viewed from the side, the Leg Press Cable should be a series of "loops". There should not be any "X's".

STEP 3

bolt end

LEG PRESS CABLE (243)

metal ball end

FIG 1

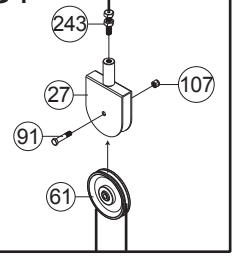

FIG 2

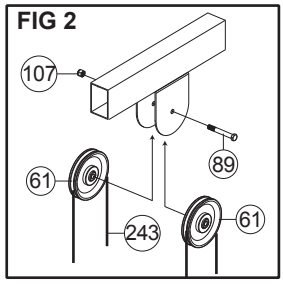

FIG 3

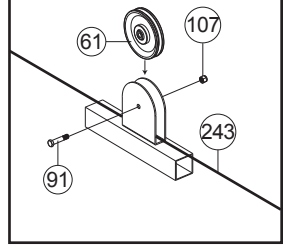

FIG 4

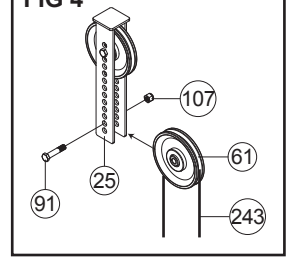

FIG 5

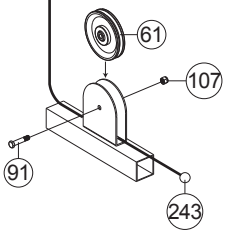

FIG 7

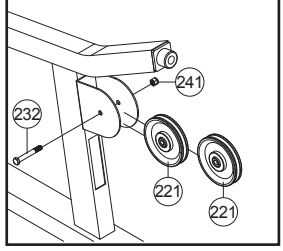

FIG 7 *STP 2*

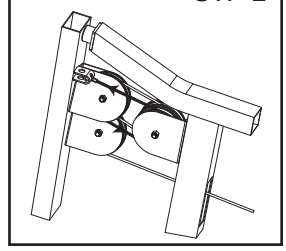

FIG 7 *STP 1*

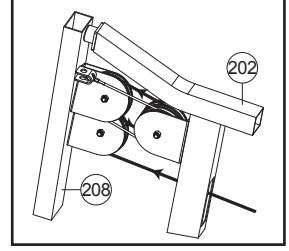

FIG 6

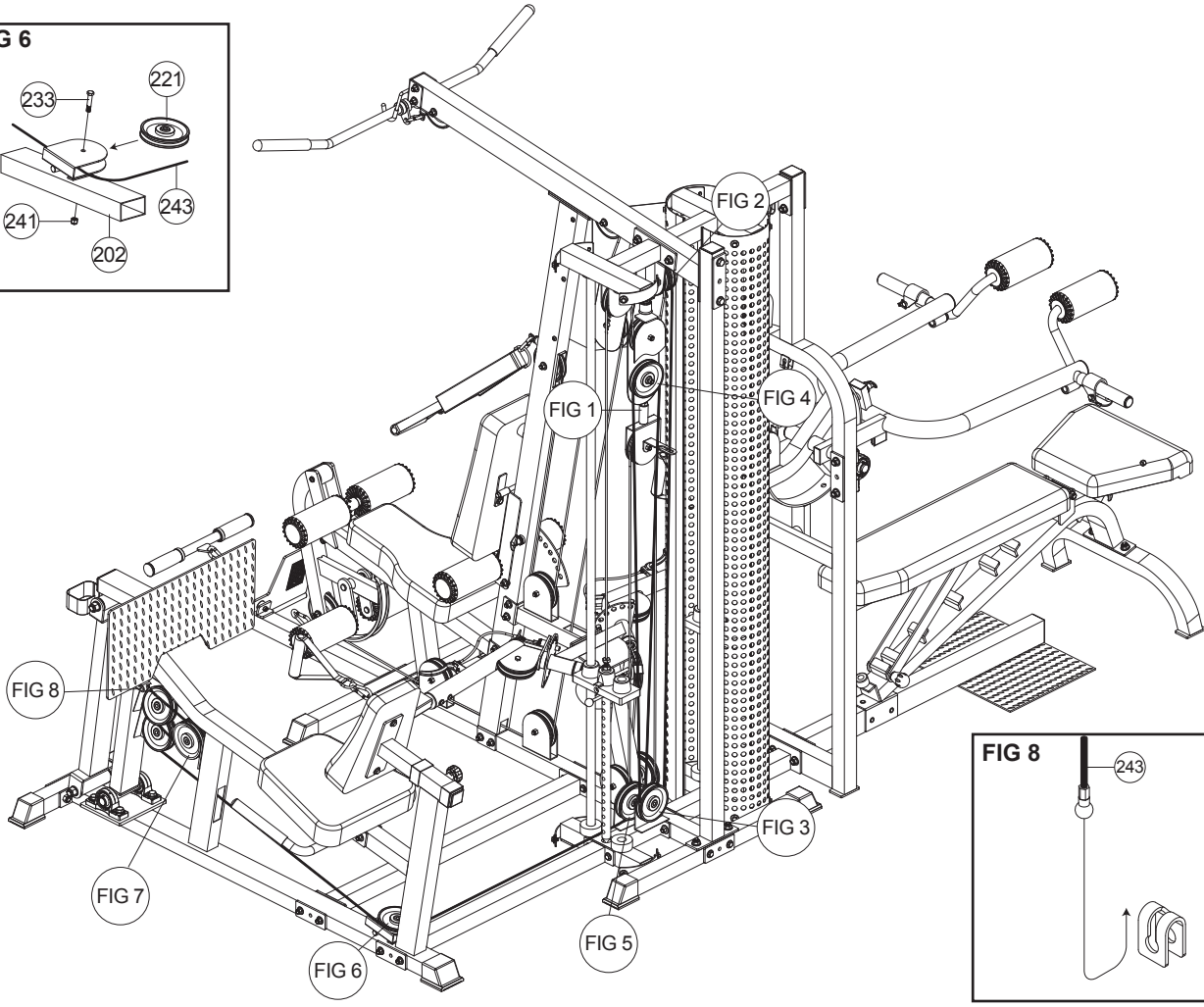

FIG 8

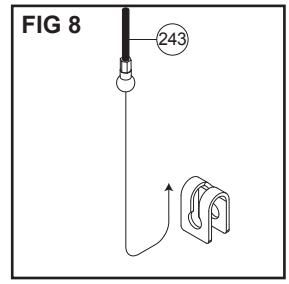

Assembly is complete! Please take the following steps before using the gym:

1.Make certain all bolts are tightened securely.
2.Make certain all cables are seated into all pulley grooves. A cable rubbingagainst steel will peel the nylon coating, voiding warranty and resulting in a need for replacement.
3.Pre-stretch the cables. Pull on the cables with great force, helping remove any kinks and providing any initial cable stretch.
4.Be aware the cables can loosen and slightly stretch upon initial use.
5.For better performance, apply a household lubricant (such as silicone) to any adjustable areas.
6.Enjoy many years of a Fit Lifestyle.

Thank you for purchasing the LEG PRESS OF K2 GYM. If You have any questions, please call your local BodyCraft dealer or call our customer service department at 800-990-5556